GROWATT

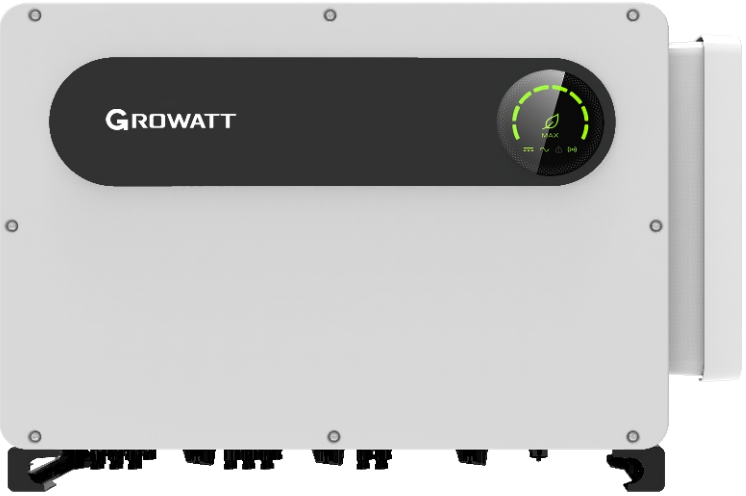

Installation & Operation Manual

Download Manual

Growatt New Energy

Shenzhen Growatt New Energy Co., Ltd
4-13/F,BuildingA,Sino-German(Europe)IndustrialPark,
HangchengAve,Bao'anDistrict,Shenzhen,China

T:+86 755 27471942
E:service@ginverter.com
W:www.ginverter.com

GR-UM-260-I-00

List

1 Overview

1.1 Product Overview
1.2 Applicable Personnel

2 Safety Precautions

2.1 Safety Overview
2.2 Symbol
2.3 Meaning of Symbol

3 Product Introduction

3.1 Appearance
3.2 Dimensions
3.3 Nameplate
3.4 Working Principle
3.5 Inverter Storage
3.6 Grid Types
3.7 AFCI Detection Function
3.8 Anti-PID Function

4 Unpacking

5 Installation

5.1 Basic Installation Requirements
5.2 Installation Environment Requirements
5.3 Moving Requirements
5.4 Wall Mounted Installation
5.5 Installing the Inverter

6 Connecting Cables

6.1 Connection on AC side
6.2 Connection on DC side
6.3 Connection of Communication Cables
6.4 Connecting the Ground Cables

7 System Commissioning

7.1 Inverter Commissioning
7.2 Modes
7.3 LED display

8 Monitoring

8.1 Remote Data Monitoring
8.2 Local Data Monitoring

9 Maintenance

9.1 Routine Maintenance
9.2 Trouble Shooting

10 Product Specification

11 Decommissioning

12 Quality Assurance

13 Contact Us

1 Overview

1.1 Product Overview

This manual is aimed at providing sufficient information and installing instruction for consumers buying Shenzhen Growatt New Energy Co.,Ltd (short as Growatt) MAX-X2 and MAX-XL2 Series solar inverters. Please read this manual carefully before using the MAX-X2 and MAX-XL2 series inverters and store the manual in a reachable place for an authorized technician. No further notice if there is any change in this manual.

1.2 Applicable Personnel

Only qualified electrical technicians are allowed to install MAX-X2 and MAX-XL2 series inverter. With reading through this manual and following all the precautions, qualified electrical technician can properly installMAX-X2 and MAX-XL2 serial inverter, finish trouble shooting and
communication settings.
If there is any problem during the installation, the installer can either log on www.ginverter.com and leave a message or call consumer service hotline +86 755 27471942.

2 Safety Precautions

2.1 Safety Overview

1>Before installation please make sure reading through this manual, any damage caused by improper installation, Growatt reserve the right to disclaim any warranty.
2>All the operations and connections must be done by trained qualified electrical technician.
3>During installation except for terminals, do not touch any inside part of the inverter.
4>All the electrical connections must meet local country's safety regulations.
5>If you need maintenance for this inverter, please contact our local authorized installing and maintenance technician.
6>You must get the local power supplier's permit before connecting this inverter to the grid.

Handle Process:

WARNING	•The inverter is heavy,please treat with care while handling,in case of crushing injury.

Installation:

NOTICE	•Before installation,please read through this manual,any damage cause by improper installation,Growatt reserve the right to disclaim any warranty.
DANGER	•Ensure that the inverter is not connected to a power supply and is not power on before installation.
WARNING	•Please follow this installation manual as installation condition environment,space and so on. •Please install the inverter in a dry and ventilated environment,otherwise may affect the performance of the inverter. •Please follow the installation procedures in this manual.

Electrical Connections:

DANGER	•Before electrical connection, please ensure the inverter DC switch is at "OFF" also disconnect AC switch, otherwise the high voltage from inverter may cause life risk. •Only trained authorized electrical technician can do the electric connection also please follow the connection procedures in this manual along with local country's regulations. •High voltage may cause electric shocks and serious injury please do not touch the inverter. •Please do not store inverter in area with flammable and explosive material.
WARNING	•Each inverter must install one AC breaker; AC breaker is forbidden to share with other inverters. •It is forbidden to add load between inverter and breaker. •If the cable is thick, after tightening the cable do not shake it and ensure the cable is well-connected and then start the inverter.Loose connection may cause overheat. •Before connecting between PV panels and inverter please ensure the positive and negative poles are correct connected.

Maintenance and replacement:

DANGER	•Must be installed by trained and authorized electrical technician and accurately follow this manual. •Please disconnect the DC and AC switch for at least five minutes, all the operations should be carried after power disconnection. •If there is PV isolation low alarm, the inverter case may be ungrounded, please do not touch the inverter case. •High voltage of inverter may result in electric shock.
WARNING	•For better cooling purpose, please regularly clean the fans. •Do not use air pump to clean the fans, cause it may damage the fans.

Other:

i	•After you receiving the inverter please check the packing materials for damage,if there is any damage please contact your supplier.
WARNING	•The Max PV input voltage should not exceed 1100V. •For the disposed inverter,the consumer should dispose it according to local disposal rules for electrical equipment waste.

2.2 Symbol Conventions

Symbol	Description
DANGER	Indicates an imminently hazardous situation which,if not avoided, will result in serious injury or death.
WARNING	Indicates potentially hazardous situation which,if not avoided,will result in serious injury or death.
CAUTION	Indicates potentially hazardous situation which,if not avoided,will result in minor or moderate injury.
NOTICE	Indicates certain hazardous situation which,if not avoided,will rusult in property damage.
i	Reminds operator to read installation manual before operating or installing inverter.

2.3 Lable Description

Symbol	Name	Meaning
	High Voltage Electric Shock	Inverter operating with high voltage,any operation regarding inverter need to be done by trained and authorized electrical technician.
	Burn Warning	Do not touch a running inverter cause it generates high temperature on the case.
	Protective Grounding	Connect inverter to grounding bar.
	Delay discharge	Residual voltage exists after the inverter is powered off,it takes 5 minutes for the inverter to discharge to the safe voltage.
	Read the installation manual	Reminds operator to read installation manual before operating or installing inverter.
	DC	Means this terminal is for DC side.
	AC	Means this terminal is for AC side.
CE	CE Mark	The inverter complies with the requirements of the applicable CE guidelines.

3 Product Introduction

3.1 Appearance

Front view:

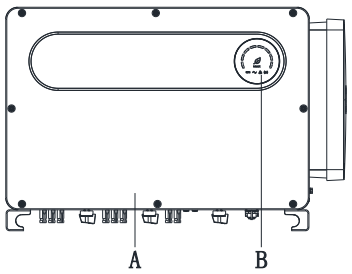

Fig 3.1

Bottom view(Termial):

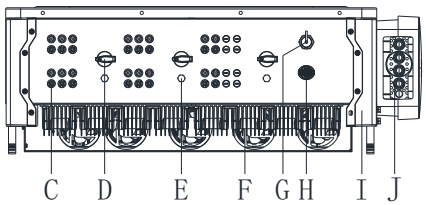

Fig 3.2

Side view:

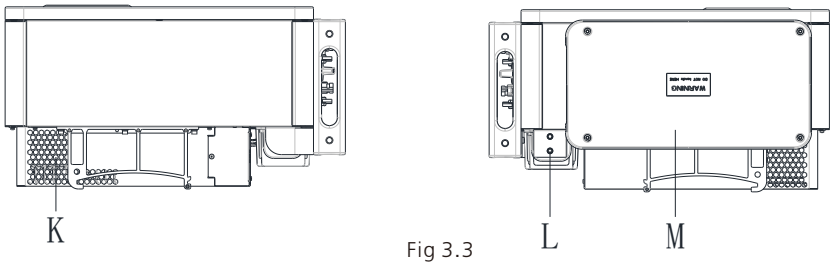

Fig 3.3

Mark	Description	Mark	Description
A	Front panel	H	COM interface
B	LED	I	Corner guard
C	PV terminal	J	Waterproof silicone pad
D	DC switch	K	Heat sink
E	Breathing valve	L	Ground screw hole
F	External fans	M	Junction Box
G	USB interface		

3.2 Basic Data

Model	Size(mm)			Weight (kg)
	Width	Height	Thickness	
MAX-X2 and MAX-XL2 Series Inverter	970	640	345	84
MAX-X2 and MAX-XL2 Series Inverter with package	1095	765	500	98

3.3 Nameplate

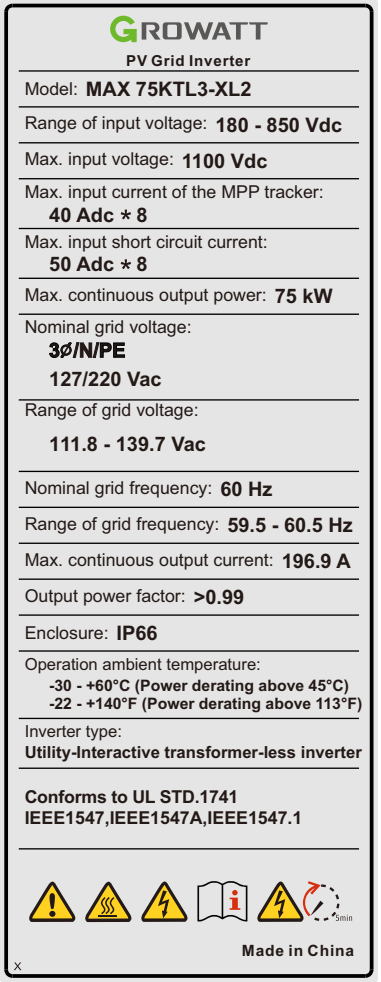

Note: Other models of MAX-X2 and MAX-XL2 series share the same label design with MAX 75KTL3-XL2, only with different model name and parameters, detail parameter please refer to specification in Chapter 10.

3.4 Working Principle

The MAX-X2 and MAX-XL2 series inverter works as follows:
1>The PV panels gather solar to generate DC power to inverter.
2>With input current detection circuit, it can monitor all the PV panels' working status and use MPPT to track the maximum power point.
3>With inverter circuit change DC power to AC power, and feed power back to grid per grid reuqirement.
4>With output isolation relay can isolate AC output and grid, if anything goes wrong on either inverter side or grid side, isolation relay can disconnect inverter immediately.

On-grid connection system diagram:

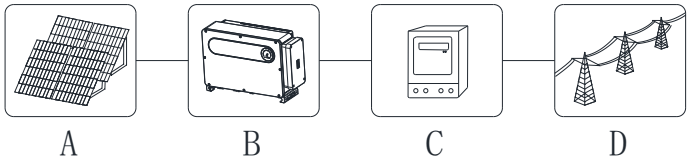

Fig 3.4

symbol	Description	symbol	Description
A	PV string	C	Electric meter
B	Inverter	D	Gird

3.5 Inverter Storage

1>Do not unpack the inverter and store it in a ventilation dry place .
2>Keep the storage temperature at -30 ℃- +60℃ and humidity at 0-95%.
3>A maximum of three inverters with package can be stacked.
4>If the inverter has been long-term stored, inspections and tests should be conducted by qualified personnel before it is put into use.

	After being stored for a month or longer, the inverter's time and date could be wrong, you need set the time and date before using, for more details please refer to Chapter 7.1 inverter commissioning.

3.6 Grid Types

The MAX-X2 and MAX-XL2 series, MAX 50-75KTL3-XL2 inverters connect to the grid like following drawing 3.5,MAX 124-150KTL3-X2 MV inverters connect to the grid like following drawing3.6.

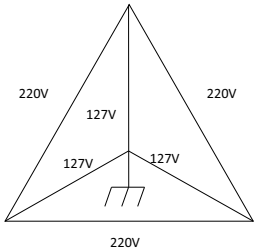

Fig 3.5

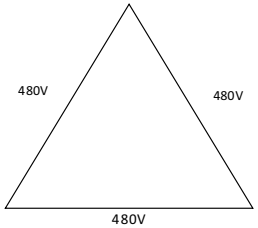

Fig 3.6

3.7 AFCI Detection Function

AFCI (Arc Fault Circuit Interrupter) is a kind of circuit protection device, the main function is to prevent the fire caused by fault arc.The electrical insulation aging, breakage, loose connection, air breakdown caused by air humidity and so on, all of these may cause an electric spark,which is called arc.
The AFCI function of the MAX-X2 and MAX-XL2 series inverter is optional, and the detection equipment is assembled inside the inverter. When an arc-drawing condition is detected on the PV input side, the arc current could be detected by the CT assembled on the PV input-side wire. Then the inverter will shut down. Meanwhile, the inverter will display the corresponding fault message and the buzzer will sound, which could help to avoid harm and economic loss to the user.

NOTE: AFCI function is optional.

3.8 Anti-PID Function

The full name of PID is Potential Induced Degradation. Since the PID effect, a large amount of charge could accumulate on the surface of the photovoltaic module, which makes the surface passivation of the module worse. Eventually, the fill factor, open-circuit voltage, and short-circuit current of the module are reduced, and the power of the photovoltaic module is attenuated.
The Anti-PID function uses the principle of reversible PID changes. MAX-X2 and MAX-XL2 series inverters rectify AC voltage at night and boost it to generate a DC voltage. The DC voltage is connected to PV + and the ground respectively. When add a positive bias voltage to the module to make the PID effect reverse,the Anti-PID function could repair the photovoltaic modules at night and prolong the service life of photovoltaic modules.

NOTE: Anti-PID function is optional.

4 Unpacking

Checking before installation

1>Before unpacking the inverter, check the outer packing materials for damage.

2>After unpacking the inverter, check that the contents are intact and complete. If any damage is found or any component is missing, contact your supplier.

Package contents:

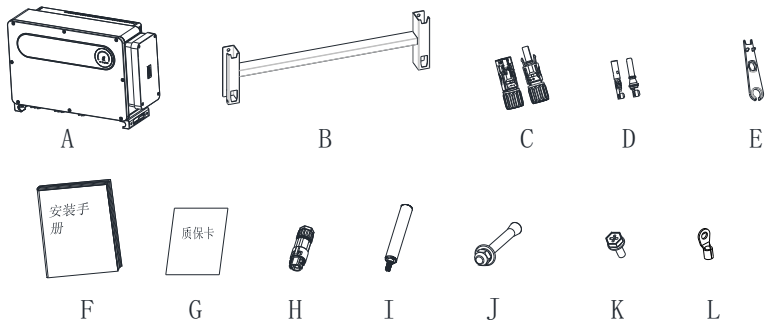

Fig 4.1

Mark	Descriptions	Number
A	Inverter	1
B	Wall mount	1
C	PV + terminal, PV- terminal	16/16
D	PV terminal metal core	16/16
E	Removal tool of PV terminals	1
F	Installation manual	1
G	Warranty card	1
H	Communication terminal	1
I	Removal handle(opt)	2
J	M10*90 Expansion screw	4
K	M6*28 stainless steel screw	2
L	AC wiring copper terminal (opt)	4 or 5

Installation 5

CAUTION	•To prevent device damage and personal injury, keep balance when moving the inverter because it is heavy. •Do not place the inverter with its wiring and signal terminals at the bottom contacting with floor or any other object because the terminals are not designed to support the weight of inverter. •When placing inverter on the floor, put foam or paper under the inverter to protect its cover.

5.1 Basic Installation Requirements

A. Ensure that the installation wall is solid enough to bear the inverter(Inverter weight please refer to installation manual Chapter3, 3.2).

B. There must be enough installation space to fit the size of inverter.

C. Do not install inverter on flammable or heat-intolerant buildings.

D. This inverter is IP 66 protection, you can install it indoor or outdoor.

E. To avoid inverter performance de-rate due to the over heat, please do not expose the inverter under direct sunlight.

F. The installation humidity should be from 0-95%.

G. The surrounding temperature of inverter should be from -30℃ - +60℃.

H. Inverter should be installed in a vertically or rear tilted surface, please refer to following drawings.

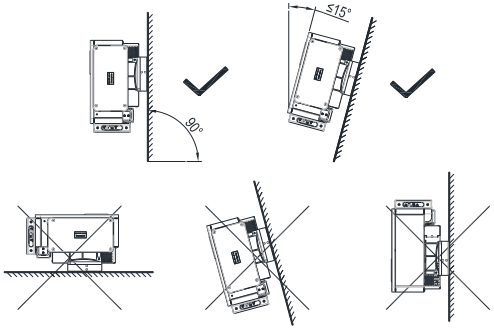

Fig 5.1

I. To ensure the inverter can work smoothly and easy for personnel to operate, please notice there is sufficient space for inverter, refer to following drawing.

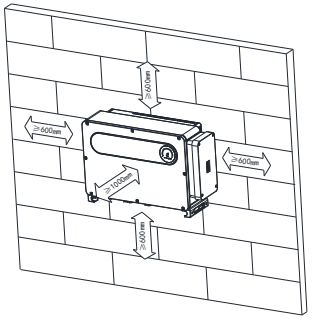

Fig 5.2

J. Do not install inverter close to strong electromagnetic signal.
K. Install the inverter out of children's reach.

5.2 Installation Environment Requirements

A. Although the inverter's protection level is IP 66, to extent inverter lifespan you still need to avoid rain and snow, please refer to following drawings.

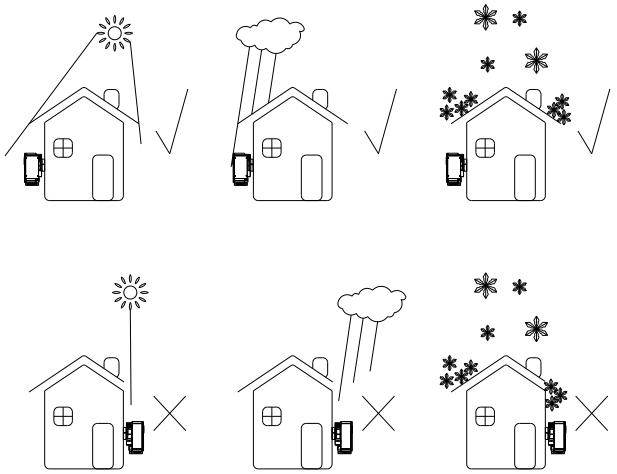

Fig 5.3

B. To reduce the de-rate performance of the inverter and extend inverter's life span, we strongly recommend you install an awning, for the distance between an awning and inverter, please refer to following drawing.

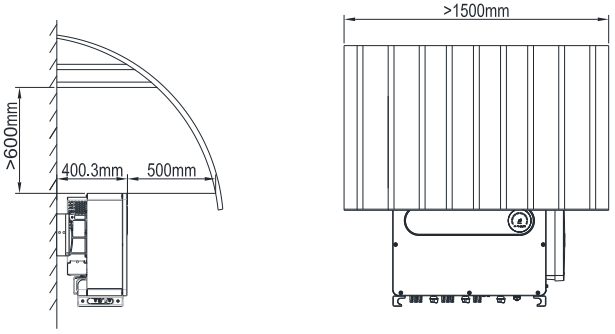

Fig 5.4

C.When you install multiple inverters on one surface, inverters should be installed as following drawing.

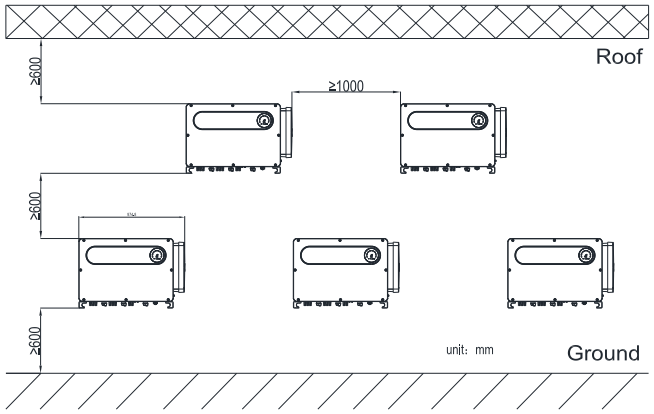

Fig 5.5

D. Do not install inverter into an enclosed space like following drawing.

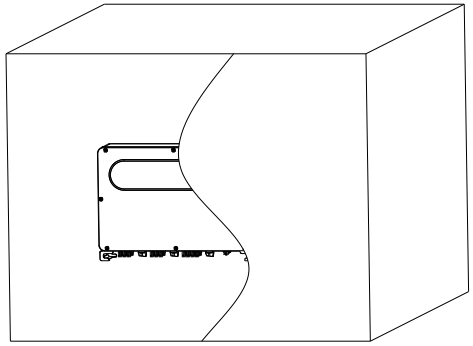

Fig 5.6

5.3 Moving Requirements

WARNING	•The inverter is heavy, please move it with care and keep balance to avoid personnel injury. •Do not place the inverter with its wiring and signal terminals at the bottom contacting with floor or any other object because the terminals are not designed to support the weight of inverter.

Plan 1:
1>As shown in Fig5.7, use a rope to tie at ring and handle, lift the inverter from package and move to installation position.
2>When you are moving the inverter, please keep the balance.
Notice:There is front and bottom mark on the package.

Plan 2(Optional):
1>As shown in Fig5.8, 4-6 persons lift the inverter out of package, swap the ring to moving handles.
2>When you are moving the inverter, please keep the balance.
Notice: There will be front and bottom mark on the package.

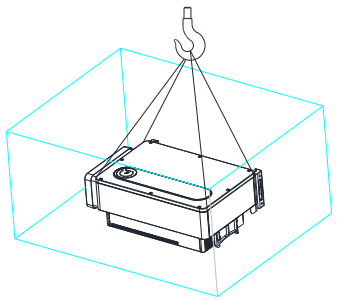

Fig 5.7

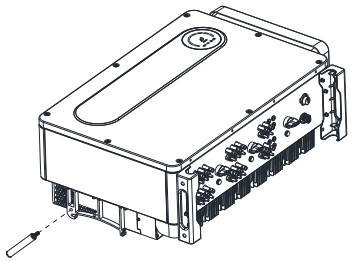

Fig 5.8

5.4 Wall Mount Bracket Installation

Before install the inverter you need install the wall mount bracket so that the inverter can be firmly installed on the wall.
Wall mount plan:

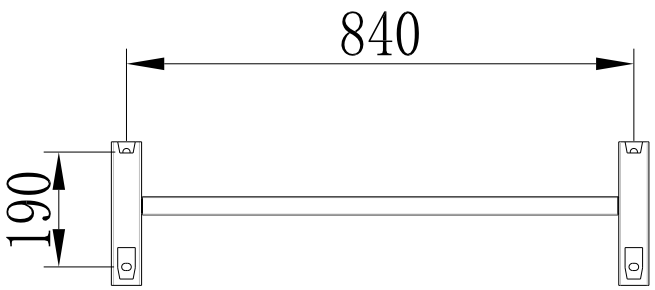

Fig 5.9

1>Use the wall mount plate as a template drill holes on the wall and put in expansion bolts.

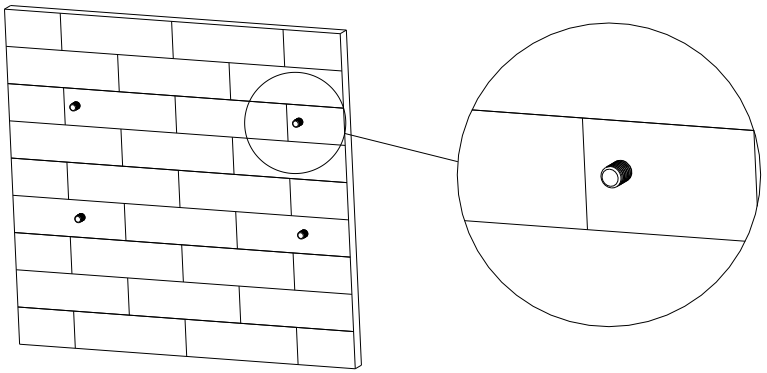

Fig 5.10

Notice: Expansion bolt should be installed on solid walls with at least 100mm thickness.

2>Follow the following drawing put the bolt to install the wall mount plate on the wall.

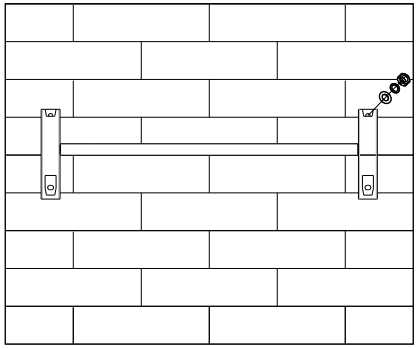

Fig 5.11

Notice: Do not install inverter unless you have confirmed the wall mount plate has been firmly installed on the wall.

5.5 Installing The Inverter

After the wall mount bracket has been firmly installed on the wall , put the inverter on that plate.
1>Use the rope(must meet the weight requirement of the inverter) through two rings and lift the inverter up, just as following Figure.
2>Before hanging the inverter on the wall mount bracket use screws to fix the inverter and please keep the inverter balance.
3>Check the inverter if it is firm enough and lock all the screws.

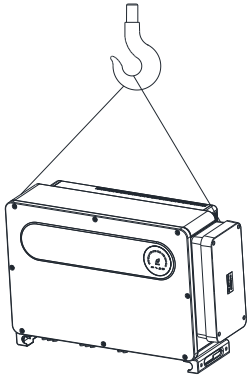

Fig 5.12

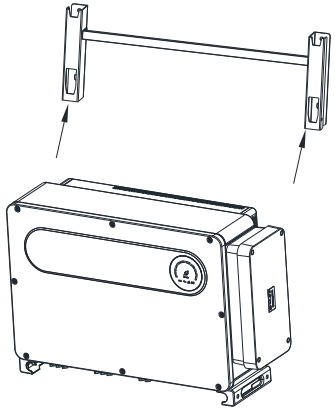

Fig 5.13

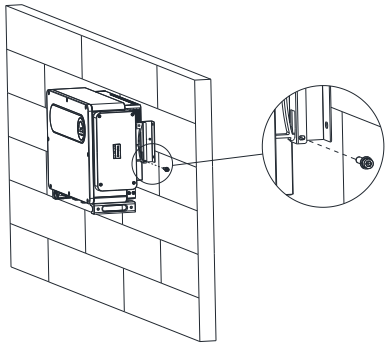

Fig 5.14

Connecting Cable 6

Decisive Voltage Class (DVC) indicated for ports

Port Name	Class
AC	C
DC	C
DRMS	A
RS485&USB	A

6.1 Connection on AC side

DANGER	•Before electrical connection, please ensure the inverter DC switch is at "OFF" also disconnect AC switch, otherwise the high voltage from inverter may cause life risk. •Only trained authorized electrical technician can do the electric connection also please follow the connection procedures in this manual along with local country's regulations. •High voltage may cause electric shocks and serious injury please do not touch the inverter. •Please do not store inverter in area with flammable and explosive material.
WARNING	•Each inverter must install one AC breaker, AC breaker is forbidden to share with other inverters. •It is forbidden to add load between inverter and breaker.

Preparation before connection:
1>Disconnect inverter DC switch and AC breaker or switch.
2>When you lock the AC cable's screw, the torque force should be 20-30N·m (200-300kgf·cm).
When you lock the cover screw, the torque force should be 2.5-3.0N·m (25-30kgf·cm).
3>Measure the grid voltage and frequency, please refer to chapter 10.
AC breaker specification:

Inverter model	Breaker model
MAX 50KTL3-XL2	200A/400Vac
MAX 60KTL3-XL2	250A/400Vac
MAX 70KTL3-XL2	250A/400Vac
MAX 75KTL3-XL2	250A/400Vac
MAX 124KTL3-X2 MV	200A/500Vac
MAX 125KTL3-X2 MV	200A/500Vac
MAX 136KTL3-X2 MV	250A/500Vac
MAX 150KTL3-X2 MV	250A/500Vac

Cable specification:

Inverter Model	Copper wire crosssectional area(mm²)	Copper wire recommendation (mm²)	Aluminum wire recommendation (mm²)
MAX 50KTL3-XL2	70-240	70	95
MAX 60KTL3-XL2			
MAX 70KTL3-XL2			
MAX 75KTL3-XL2			
MAX 124KTL3-X2 MV			
MAX 125KTL3-X2 MV			
MAX 136KTL3-X2 MV			
MAX 150KTL3-X2 MV			

Notice:The cable must be unbroken.
When using aluminum alloy cables, please use copper-aluminum transition terminals.

AC side connection steps:

WARNING	•If the cable is thick, after tightening the cable do not shake it and ensure the cable is well-connected and then start the inverter. Loose connection may cause overheat.

1>Following drawing shows inverter's AC terminal, R, S, T are three live lines, N is Neutral line.

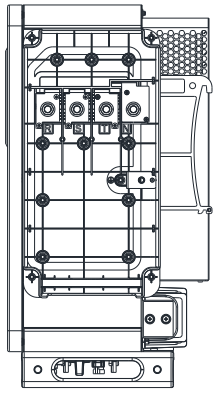

Fig 6.1

2>Determine the stripping length (approximately 30mm) according to the specifications of the crimping terminal. Use crimping tools to crimp the wires and terminals, then connect the cables to the corresponding channels through the waterproof interface, and tighten the screws.

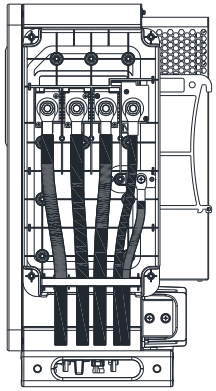

Fig 6.2

NOTE: Use a torque wrench to tighten the screws/nuts with reference to the torque ranges provided above.

Diagram of how to install a terminal:

Fig 6.3

3>Apply fireproof mud to the threading holes on the waterproof silicone pad to prevent the risk of water ingress, as shown in the figure below.

WARNING	•The gaps in the cable threading holes must be blocked,otherwise there will be a risk of water leakage.

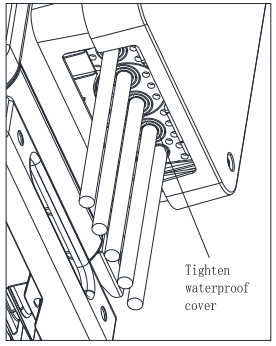

Fig 6.4

6.2 Connection On DC Side

DANGER	•Before electrical connection, please ensure the inverter DC switch is at "OFF" also disconnect AC switch, otherwise the high voltage from inverter may cause life risk. •Only trained authorized electrical technician can do the electric connection also please follow the connection procedures in this manual along with local country's regulations. •High voltage may cause electric shocks and serious injury please do not touch the inverter. •Do not place flammable or explosive materials around the inverter.

Notice: The sunlight will generate voltage on the solar panels, after serial connection, the high voltage may injure personnel, so before connect DC input cable you need cover solar panels with light-tight materials and make sure the inverter DC switch is at "OFF" status, otherwise high voltage may injure personnel.

WARNING	•Each string's maximum open circuit voltage cannot exceed 1100Vdc, otherwise it could lead to fire or damage the inverter. If the inverter was damaged by higher maximum open circuit voltage (higher than 1100Vdc) product warranty will be forfeited and Growatt will not take any responsibility. •The inverter shall be used with IEC 61730 Class A rating PV module. •When the group is suspended, be sure to use dust plugs to block up to prevent entering the water into the dust.

1>Each string solar panels should be same brand and same model.
2>Under any circumstance, the maximum short circuit current should not exceed 50A.
3>The total panels power should not exceed 1.5 times of inverter input power.
4>To optimize system settings, recommend two strings with same amount solar panels.
Notice: Connectors need to be fit with male and female terminals, before connecting panels with inverter please make sure the positive pole and negative pole, namely the solar panels'positve pole connect to"+" negative pole connect to"-".

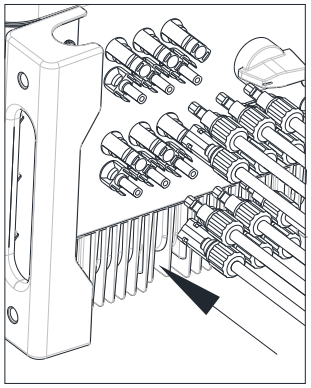

Fig 6.5

5>Decide the length of peeling base on cable terminal, use the wire stripper to connect cable and terminal, and separately connect to specific connector.

6>Connect the positive and negative poles to inverter terminals, different inverter's maximum single string input current please refer to following table.

Inverter model	Max. single string input current
MAX-X2 and MAX-XL2 serial inverter	20A*2

7>Cable specifications:

Inverter model	Cross-sectional area(mm²)	Recommendation (mm²)	Cable outer diameter(mm)
MAX-X2 and MAX-XL2 serial inverter	4-6	4	4.5-7.8

Notice: 1. Under any circumstance, the total current of all strings cannot exceed the inverter's maximum current.
2. Do not touch any working solar panels.
3. Make sure the cable is unbroken.

6.3 Connection Of Communication Cables

6.3.1 RS485 port

RS485 can carry out single-machine communication or multi-machine (32pcs) long-distance (500 meters) high-speed (baud rate 38400) communication. It is recommended to use twisted-pair shielded wire for RS485 communication line. For single-machine communication, the communication line can be connected to pin 3/4, and its shielding layer can be connected to pin 1. When multiple machines are connected in parallel, two RS485-1 ports can be connected at the same time. When used, the shielding layer can be connected to pin 1/2.

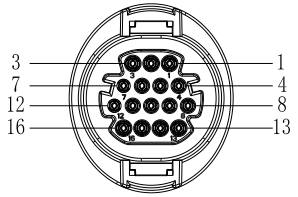

Fig 6.6

Port	PIN	Description	Port	PIN	Description
Shield ground	½	485-1 PE Shield	DRMS	9	DRM1/5
RS485-1 IN	3	485-1 A1		10	DRM2/6
	4	485-1 B1		11	DRM3/7
RS485-1 OUT	5	485-1 A1		12	DRM4/8
	6	485-1 B1		13	REF/GEN
RS485-2	7	485-2 A1		14	DRM0/COM
	8	485-2 B1	RS485-1Matching resistance	15/16	485-1Matching resistance

Notice: When multiple inverters communicate in parallel, the last machine needs to add matching resistance. The method is to use a wire to connect the pin 15/16 together.

In MAX-X2 and MAX-XL2 series inverters, RS485 interface is standard. The connection steps of RS485 communication line are as follows:
1) Unscrew the waterproof cover of the COM interface and remove it.
2) Connect the RS485 communication line to the port of 485-1.
3) The inverter is connected hand in hand through the RS485 communication line, and the end of the communication line 485_A/B is connected to the monitoring equipment to realize multi-machine remote monitoring.
Note: When locking the RS485 cable screw, the torque is 0.4-0.6N·m (4-6kgf·cm).

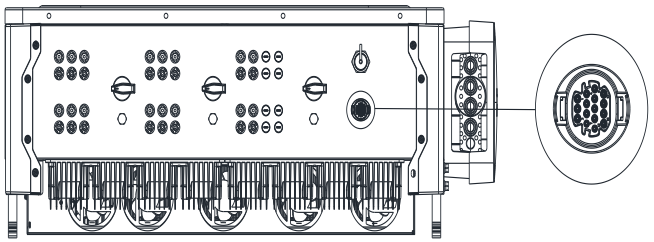

Fig 6.7

6.3.2 USB port

The MAX-X2 and MAX-XL2 series inverters are equipped with a USB interface as standard, which can be connected to a USB to WIFI module, Shine GPRS-X2, Shine WIFI-X, Shine 4G-X, Shine Link-X and other optional monitoring modules to realize remote Monitoring function. In addition, you can also quickly upgrade the inverter software through the U disk.
Steps to install the monitoring module:
1> Loosen the waterproof cover of the USB interface and remove it.
2> As shown in Figure 6.8A, insert the Shine GPRS-X2 module into the USB interface, and the LED of the Shine GPRS-X2 module will be on.
3> As shown in Figure 6.8B, make sure that the △ is facing upwards, insert the monitoring module into the USB interface, and tighten the lock.
Note: If you use a USB to WIFI module, when the operator leaves, please take the module and the data cable away, and tighten the waterproof cover to prevent water from entering the interface.

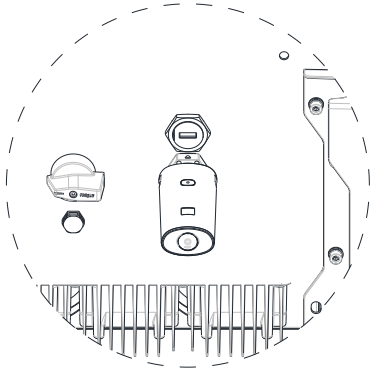

Fig 6.8A

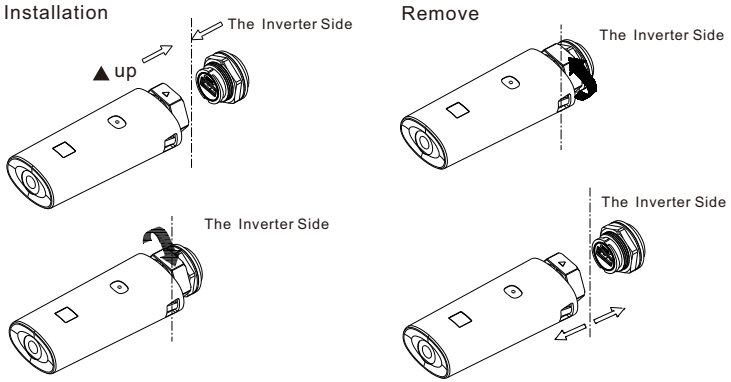

Fig 6.8B

6.4 Connecting The Ground Cables

In this solar system all the unloaded metal components and cases should be connected to the ground.
Single inverter need grounding over a PE point, multiple inverters need connect all the inverter PE cable and solar panels shelves to the same grounding point to achieve equipotential.
The grounding steps as following:
Take out the ground screw at the inverter bottom, connect the ground cables as following figure.
Notice: 1.The machine is safely separated from the lightning protection and the distance is as far as possible.
2.Do not expose Grounding terminal in the air and precaution for the rain.
3.When you lock the case ground screw, the torque force should be 6-8N·m (60-80kgf·cm).

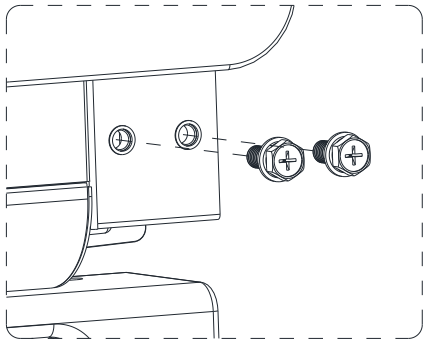

Fig 6.9

According to the relevant provisions of IEC 61643-32 "Connecting to photovoltaic devices surge protectors - selection and use of guidelines", whether for household or outdoor photovoltaic power plants, it is necessary to ensure the implementation of lightning protection measures for photovoltaic systems:

WARNING	The lightning protection measures for photovoltaic systems shall be carried out in accordance with the corresponding national standards and IEC standards. Otherwise, photovoltaic devices such as components, inverters and power distribution facilities may be damaged by lightning. In this case, the company does not carry out warranty and assumes any responsibility.

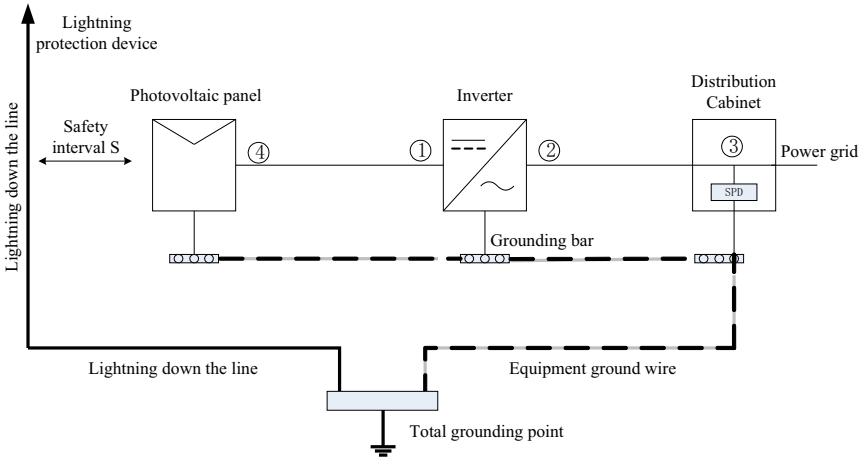

Fig 6.10

1)It is generally recommended to install lightning protection devices (such as lightning rods / lightning protection belts and down conductors) to prevent lightning from hitting the PV array.
2)Lightning protection devices and down-conductors and related equipment in photovoltaic systems (including photovoltaic panels, inverters, cables, power distribution equipment) should maintain a safe separation distance S.
Suggested value of S: According to the general 5 storey height (about 15m) building roof, S takes 2.5m enough, this distance can be simplified according to the inverse relationship of the floor height.
A. When the safety distance S is satisfied:
The position ①③ of the figure should be equipped with a lightning protection module. In general, it is recommended to install Type II in position ① and Type I in position ③.
B. When the safety and safety distance S is not met:
In addition to position 3, Type I lightning protection module should be installed in Figure ①②④.
3) The lightning down conductor and the equipment ground wire eventually sink at a total ground point, but the two cannot share the wire. That is, the equipment grounding wire should be pulled separately, and the wire diameter requirement >6mm² when the safety interval distance S is satisfied.
4) About the above lightning protection lightning receptor system related design reference GB/T 21714.3-2015.

7 Commissioning

7.1 Commission The Inverter

	•If the inverter is stored over one month, its default time and date may looks wrong, the time and date should be reset before connection to the grid.

The inverter will be set to the appropriate model according to the standards of different countries or regions before leaving the factory. For example, the inverters shipped to Australia are configured as Australian model in the factory.
Note: The inverter is configured for Australia at the factory.

7.1.1 Set inverter address

After inverter is started normally, inverter address can be set via RS485/USB converting to WIFI.When multiple inverters are connected in parallel via RS485, the inverter must be set to a different communication address. When a single inverter communicates, the default communication address can be used.
Note: The default communication address of the inverter is 1, which can be set to 1-254.

7.1.1.1 Set RS485 address with Shinebus

The 485 address of the inverter can be modified by Shinebus, This operation is performed by a professional.

7.1.1.2 Set RS485 address on ShinePhone APP

Refer to 8.2 download mobile APP ShinePhone and connect to inverter WIFI to enter local monitoring page, this operation is performed by a professional.
1>Click "Parameters";
2>Enter passwor.(When you use it for the first time, you need to set the password first. Click "Reset password" to enter the OSS account number and password. The distributor and installer can apply for the OSS account from Growatt. Click "Sign in" to set the password. After the setting is successful, you can start using it.)
3>Click top item "COM Address";
4>Click the "Read" button in the upper right corner to read the current communication address of the inverter;
5> Set inverter com address;
6>Read inverter com address to ensure setting is successful;

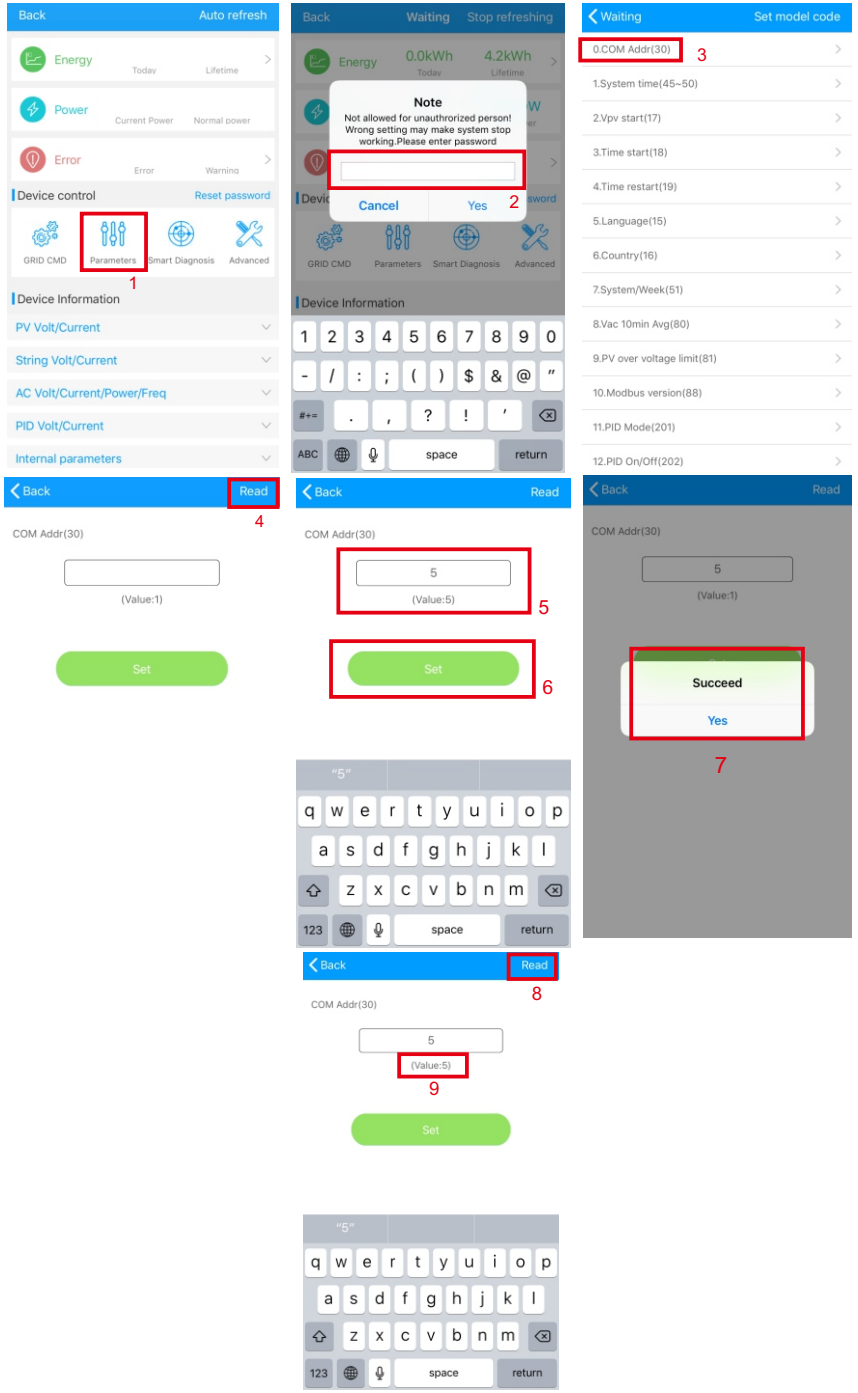

Fig 7.1

7.1.2 Set inverter time and date

Method 1:
Please refer to section 8.2.1 and login ShinePhone APP.Click "system time(45-50)"to set inverter time and date on the parameter setting page.

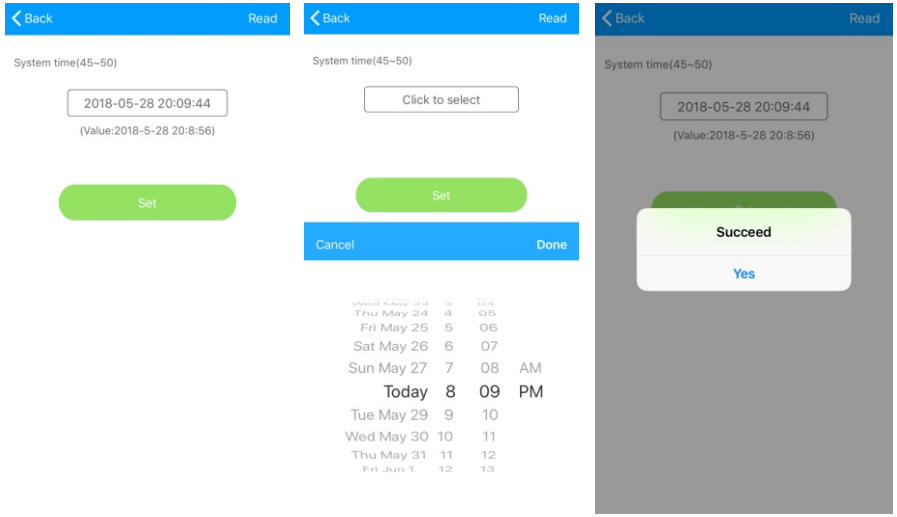

Fig 7.2

7.2 Operation Mode

7.2.1 Waiting mode

When the DC voltage is more than 180Vdc, inverter will be powered on and enters the "waiting" state.
At this mode, inverter will check the system parameter. If the system is normal and PV voltage is more than 195Vdc, inverter will try to connect to the grid.

7.2.2 Working mode

At this mode, inverter work normally,and the Power or fault code indicator light shows the power delivered by the inverter to the grid.
When the DC voltage is more than 180Vdc,inverter converts the DC power generated by the PV modules into AC power and supplies them to the grid.
When the DC voltage is lower than 180Vdc, inverter will enter into "waiting" state and try to connect to the grid, at this status, inverter consume very small power to check the internal system status.
Note: only when the PV modules supply enough power(voltage>195Vdc) then the inverter will start automatically.

7.2.3 Fault mode

Inverter intelligent control system will continuously monitor and adjust system status.When there is a fault detected, LED will show the fault message.
Note: Please refer to section 8.2 to check the fault message and take corrective measures.

7.2.4 Off mode

When the sunlight is weak or no light, inverter will stop working automatically. When it is off, inverter will not consume gird power or PV module. At the same time, the LED of inverter will be turned off.
Note: When PV string DC voltage is too low(≤150Vdc), inverter will be off.

7.3 LED Display

Inverter current operation status can be visually checked from LED display directly.

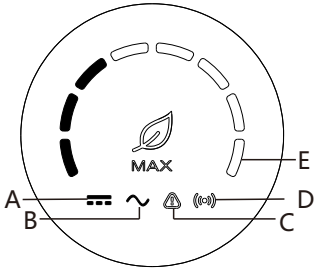

Fig 7.3

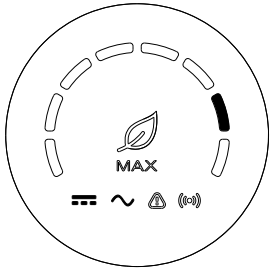

Fig 7.4

Description of LED status			
Position of LED	Type of LED	Inverter status	LED status
A	PV voltage indicator light	PV voltage reaches grid voltage	Green light is on
		PV voltage does not reach the grid voltage	Light is not on
B	AC voltage indicator light	Inverter is in the grid state	Green light is on
		No AC voltage	Light is not on
		With AC voltage, inverter is in the grid countdown state	The green light flashes slowly, and the alarm or fault indicator light is not on

Description of LED status			
Position of LED	Type of LED	Inverter status	LED status
B	AC voltage indicator light	With AC voltage, inverter is in a fault state	The green light flashes slowly, and the alarm or fault indicator light is steady red.
C	Alarm or fault indicator light	Inverter works normally	Light is not on
		Inverter is in alarm state	Red light flashes slowly
		Inverter is in fault state	Red light is on
D	Communication indicator light	Inverter has external communication, such as RS485, GPRS, etc.	Green light is on
		Inverter has no external communication	Light is not on
		Inverter upgrade or USB interface is reading and writing data	Green light flashes
E	Power or fault code indicator light	Inverter is in the grid state	The eight LEDs from left to right represent the power of the inverter: if 8 green lights are on, it represents 100% of the inverter power. As shown in Figure 7.3, it represents 37.5% of the inverter power, and so on.
		Inverter is in fault state	The 8 LED lights from right to left represent the fault codes currently reported by the inverter. From right to left, they represent 1, 2, 4, 8, 16, 32, 64, and 128. For example, the first and fourth green LEDs on the right are always on, which means 1+8=9. In addition, add 200 to get 209, which means the inverter reports fault 209, and so on.

Monitoring 8

8.1 Remote Data Monitoring

MAX-X2 and MAX-XL2 series inverter remote monitoring ways include APP(ShinePhone) and server Web page, RS485,GPRS,4G,PLC(reserved) can satisfy both ways of monitoring.

8.1.1 Mobile phone APP(ShinePhone) remote monitoring

1>Scan the following QR code, or download from Android store or App store by searching "Shinephone", download and install software.

Fig 8.1

Note: 1.Make you it's the latest version.
2.Please find more details on http://server.growatt.com.

2>Users can register their mobile APP account by following the steps below:

Run ShinePhone, go to login page, click "register".Registration is required to fill in the information, with the * is required, the agreement is mandatory, you can log in to the main interface of ShinePhone after registration, the registration page and the main interface are as shown below.

Shinephone login and main page:

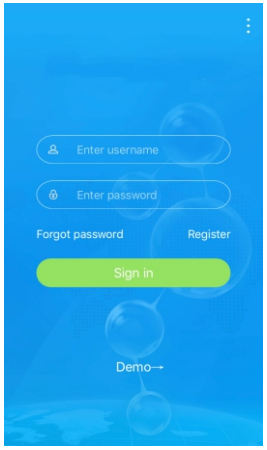

Fig 8.2

Fig 8.3

Device page:
1>Main page top middle is the name of current plant, user can click the "v" button to switch to other plants under this account.
2>User can add datalogger,check datalogger and add plant by click"+"button at the top right corner.
3>Top half shows current plant power, revenue today and total production.
4>My device list shows current plant device, user can see more details by click the device, left cross the device to stick the device and edit, edit operation includes change device alias, icon,and delete device.

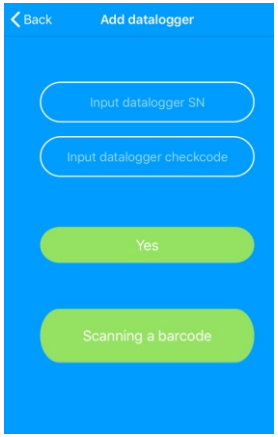

Fig 8.4 add datalogger

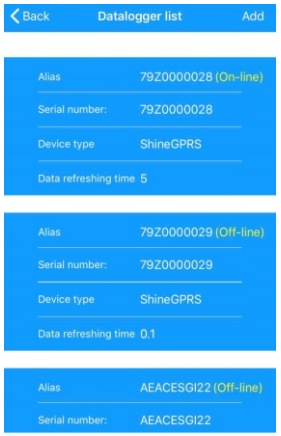

Fig 8.5 datalogger list

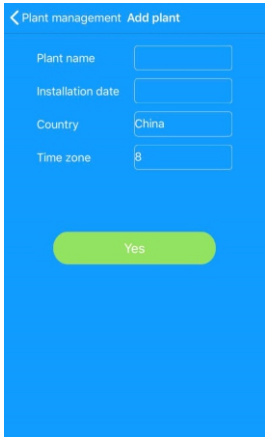

Fig 8.6 add plant

Datalogger:
1>User can add more datalogger under the particular plant.
Way: Click "+" in the upper right corner of the device page and select "Add Collector (WiFi/GPRS, etc.)", as shown in Figure 8.7.
Note: You can choose to manually enter the collector serial number for addition, or you can add it by scanning the barcode on the nameplate.

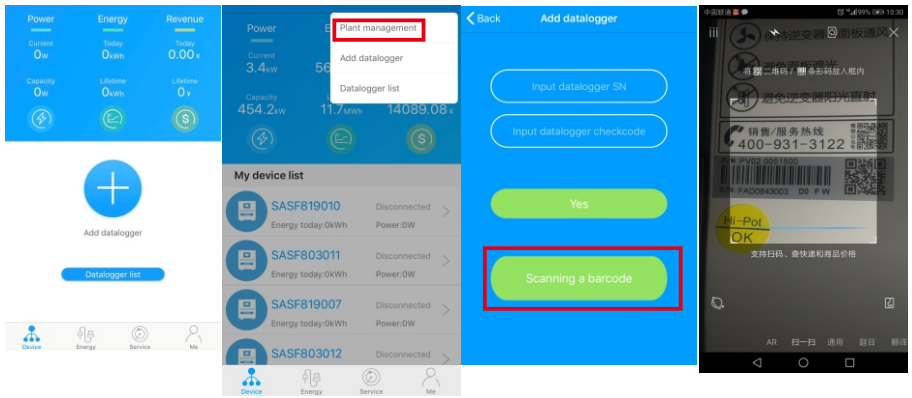

Fig 8.7

2>User can add datalogger at the datalogger list page to add a datalogger, edit, delete, configure etc.
3>User can add more plants with the add Plant function.

Device page and function:
1>Device page: User can click the device to see more details, the device page show current power and Energy today and daily power chart, user can find more with control,parameter, data and Events page.
2>Control: user set inverter on/off, set active power, set reactive power, set PF, set inverter time, set grid voltage high, set grid voltage low. The operation password is : inverter+date, for example inverter20170722.
3>Parameter: user can see device SN, rated power, firmware version, PV1 voltage, current, and power etc.

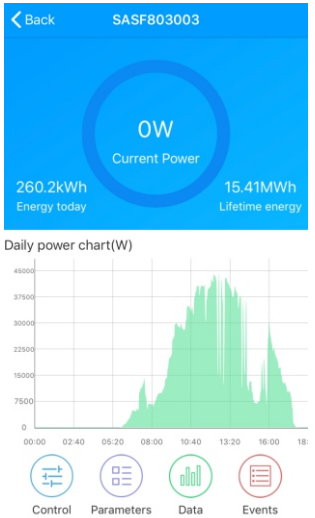

Fig 8.8

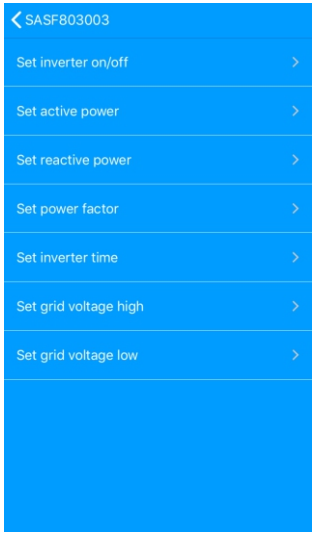

Fig 8.9

Fig 8.10

4>Data page: user can see the PV power, voltage, current, R phase power, S phase power, S phase power, T phase power, output power by day, month, year, by finger up cross the screen.
5>Events: User can see the fault message if there it is.

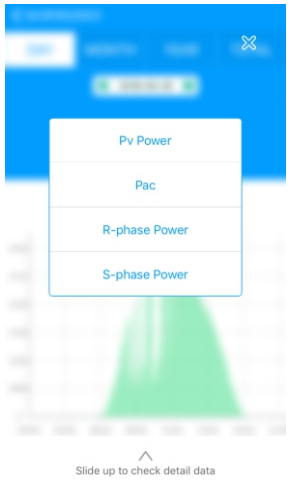

Fig 8.11

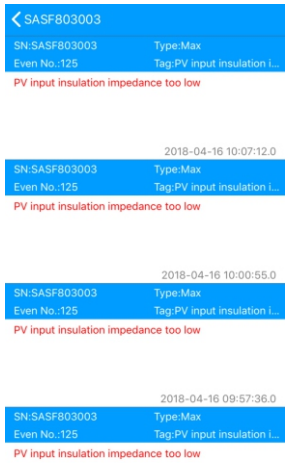

Fig 8.12

8.1.2 GPRS /4G

8.1.2.1 Register account

1>Register account

Open browser, input "server.growatt.com", click "New User" at login page, input the necessary information then go back to login page, input the registered username and password, click "Sign In".

Fig 8.13

Fig 8.14

2>Add datalogger

At Plant page, click device manage, then click add datalogger, input the SN and valid code then save, after device is powered on, datalogger will show after 5mins, also the device will come online(our device is monitored by datalogger, so need to add the datalogger here first).

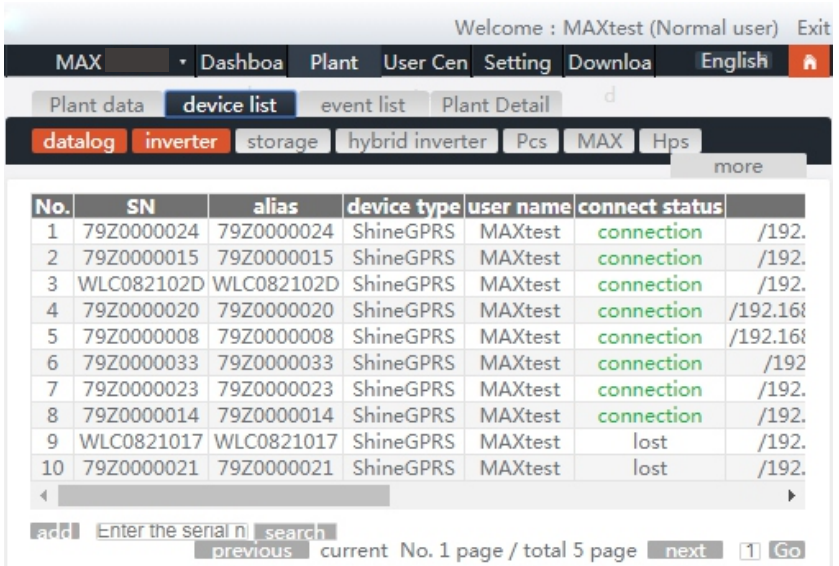

No.	SN	alias	device type	user name	connect status	
1	79Z0000024	79Z0000024	ShineGPRS	MAXtest	connection	/192.
2	79Z0000015	79Z0000015	ShineGPRS	MAXtest	connection	/192.
3	WLC082102D	WLC082102D	ShineGPRS	MAXtest	connection	/192.
4	79Z0000020	79Z0000020	ShineGPRS	MAXtest	connection	/192.168
5	79Z0000008	79Z0000008	ShineGPRS	MAXtest	connection	/192.168
6	79Z0000033	79Z0000033	ShineGPRS	MAXtest	connection	/192
7	79Z0000023	79Z0000023	ShineGPRS	MAXtest	connection	/192.
8	79Z0000014	79Z0000014	ShineGPRS	MAXtest	connection	/192.
9	WLC0821017	WLC0821017	ShineGPRS	MAXtest	lost	/192.
10	79Z0000021	79Z0000021	ShineGPRS	MAXtest	lost	/192.

Fig 8.15

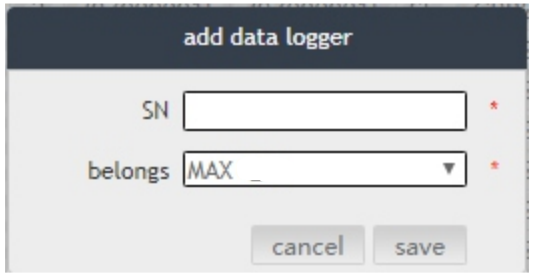

Fig 8.16

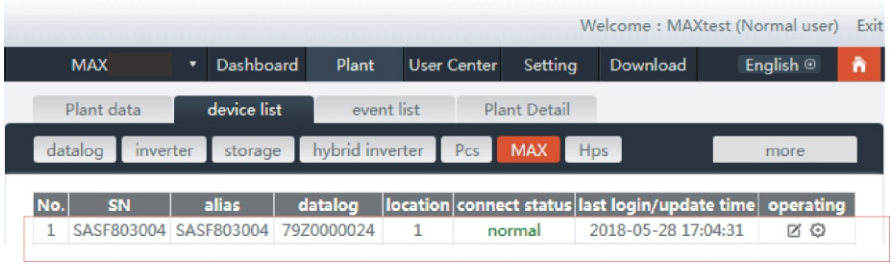

Fig 8.17

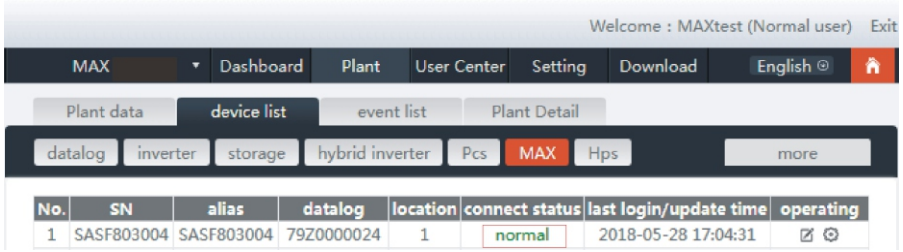

Fig 8.18

3> Data reading

A.Basic production reading, Energy today, total production, revenue today and accumulative revenue are showing on this page.

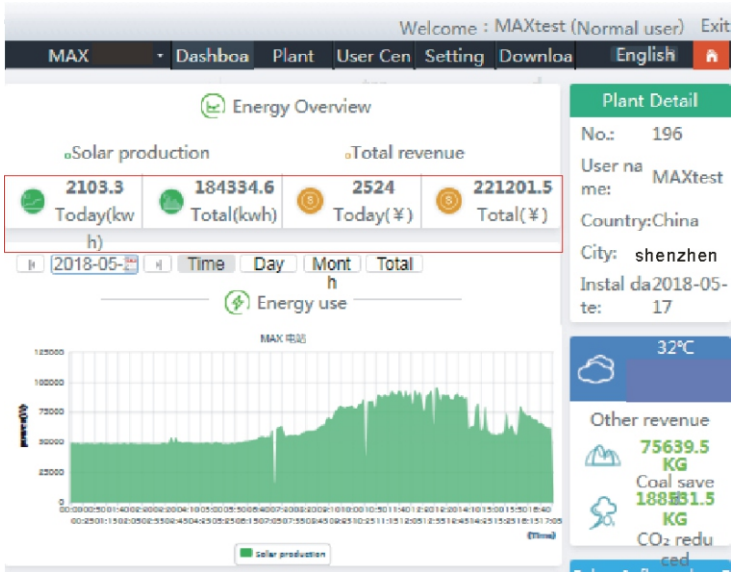

Fig 8.19

B. Plant data page can check device power, voltage curve by time, day, month or year.

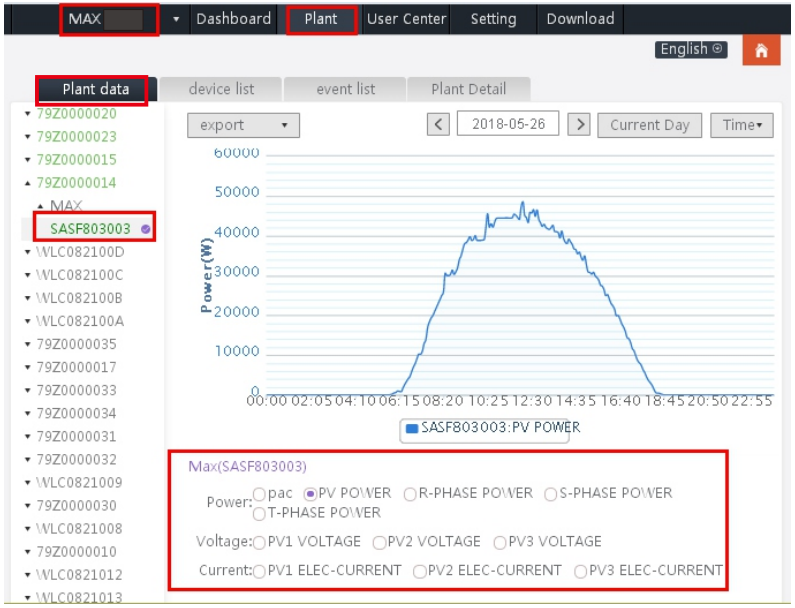

Fig 8.20

4>Set up the equipment
The device management page selects MAX. The serial number of the device to be set can be found in the list.
Notice: The following operations are requested by professionals.

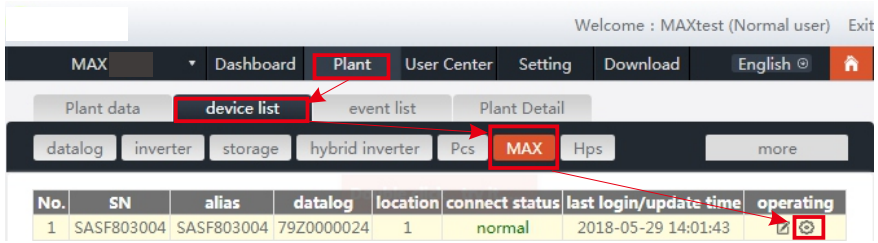

Fig 8.21

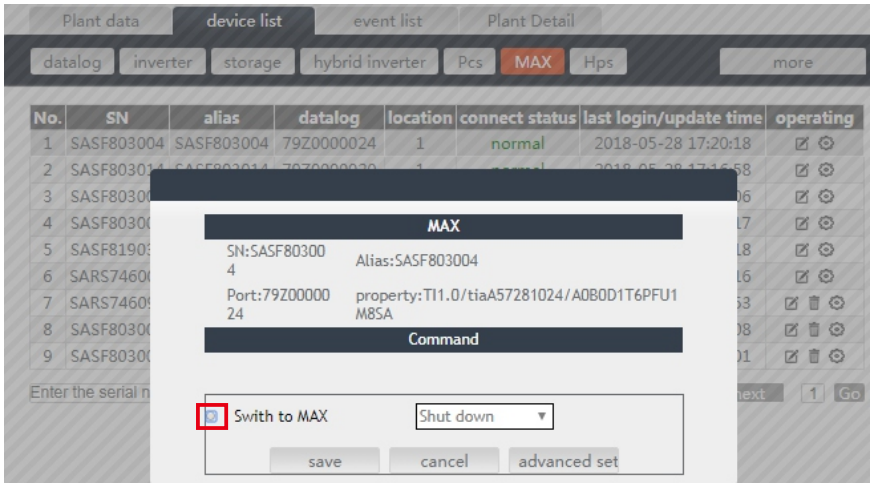

Fig 8.22

5>Check detailed data
Double-click the device serial number in the device list. The detailed data page is displayed. Data pages can be viewed by date or exported.

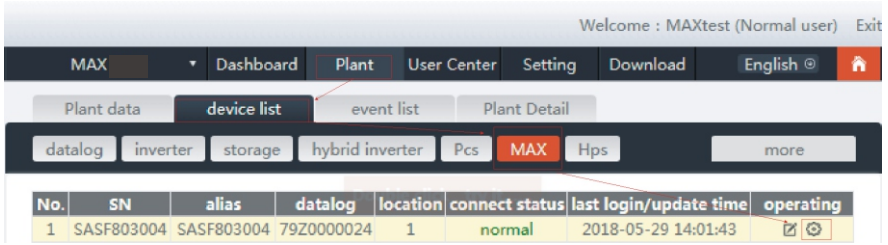

Fig 8.23

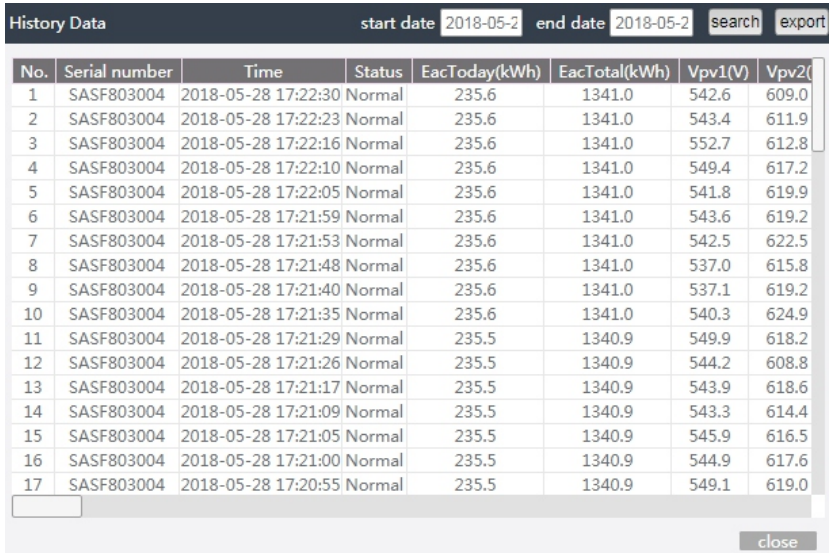

Fig 8.24

8.1.2.2 Shinemaster monitoring

This is a cost-effective and compact monitoring device that is specially designed for solar power plants, with a high-speed CPU and a stable Linux system that intelligently records the user's system characteristics.

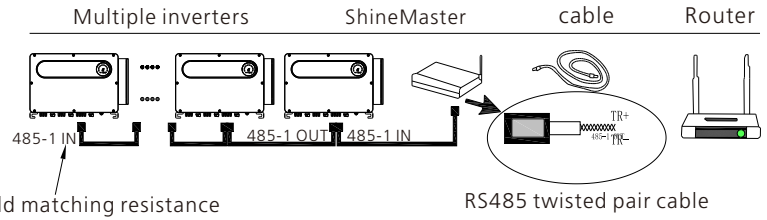

Feature：
1> A versatile and high-performance communication data logger that notifies the user of system status at any time.
2> Flexible parameter setting, system information management, error prompting and recording, high-capacity storage.
3> Collect data and upload data to Growatt in real time over the network.
Note: The smart meter and environmental monitor must be Growatt's designated manufacturer, otherwise monitoring will not be possible. When RS485 of multiple machines is used in parallel, please connect the ground wire according to section 6.3.1.

The system framework of communication monitoring is shown in the figure below. Users can choose the most suitable monitoring method according to the actual situation.

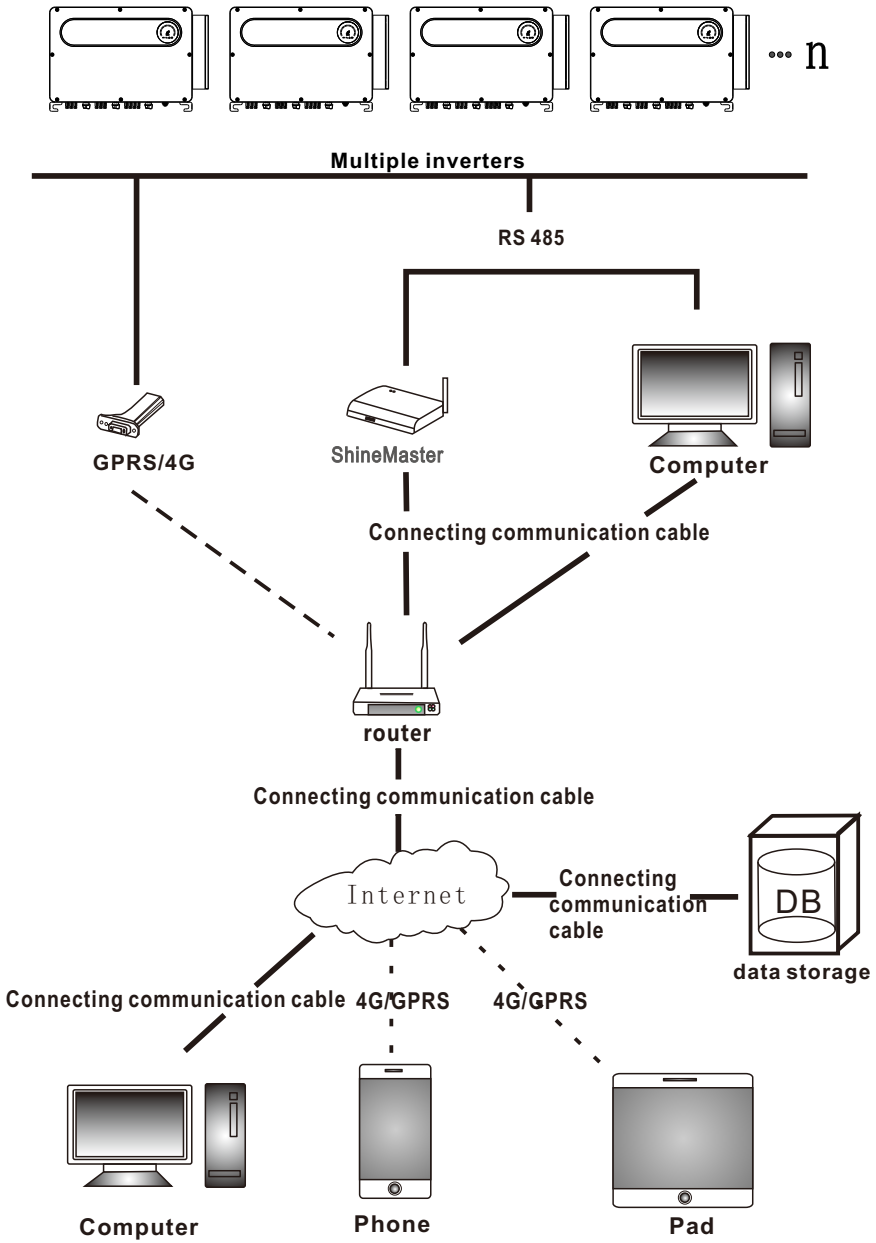

1>ShineMaster IP Address query
A.The PC and shinemaster lan ports are connected to the router's port through the network cable, so that they are in the same local area network.
B. Go to the router's management page and check the "Internet host list" to query the IP address of the ShineMaster serial number as the name of the connected device. This IP is the IP address assigned by the router to the ShineMaster. If you do not know how to do this, contact your network administrator for operation.
Note: The router needs to enable automatic IP assignment, that is, open the DHCP function.
C. Enter the shinemaster IP address in the browser to enter the shinemaster built-in page.

2>ShineMaster Built-in page access
Before accessing, check whether the communication cable between the devices is securely connected. After the check is correct, you can enter the ShineMaster IP address in the IE browser to access the built-in page of the ShineMaster. As long as the ShineMaster is on the same network segment as the computer you are accessing, you can access the ShineMaster built-in server.
A.If the user successfully visits the shinemaster built-in page, they can go directly to the built-in page login interface, as shown in figure 8.25 below.

Fig 8.25

B. Enter user name and password, default login username: admin password: admin. click login after filling in, enter growatt shinemaster system page.

3>ShineMaster Data collector status view
Click on the status of the shinemaster data collector to view shinemaster "system state information", "serial number," server address, "number of connected devices," and so on.

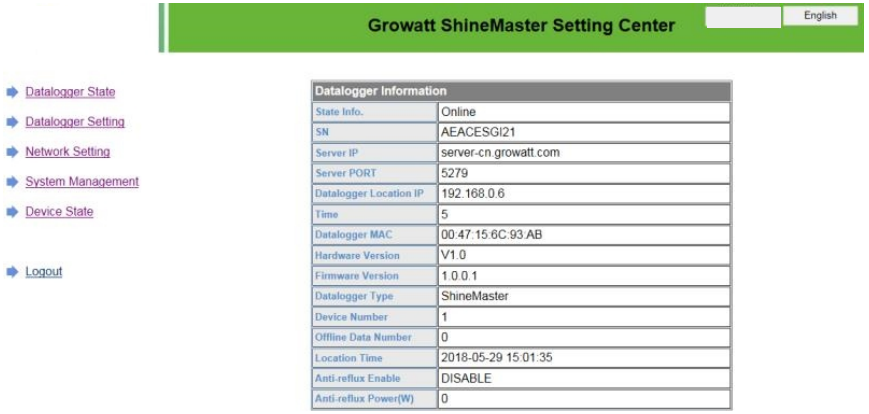

Fig 8.26

4>ShineMaster Data collector add or delete device
ShineMaster Before monitoring photovoltaic devices, we need to enter the page of the built-in shinemaster data collector settings to add devices.

A. Add device
1)Select the monitoring mode for monitoring photovoltaic devices in the first drop-down list of add or remove devices.

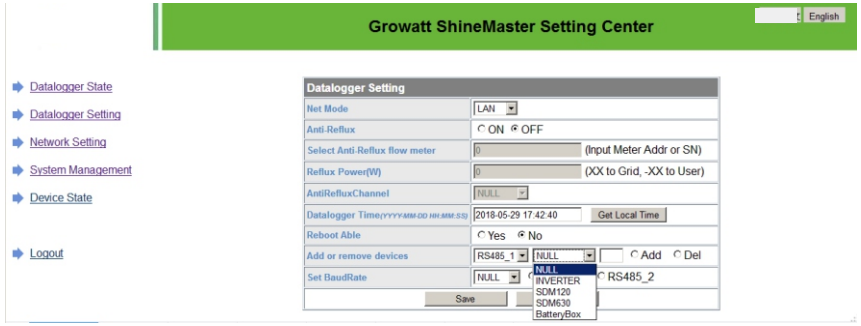

Fig 8.27

2)Select the type of photovoltaic device monitored in the second drop-down list.

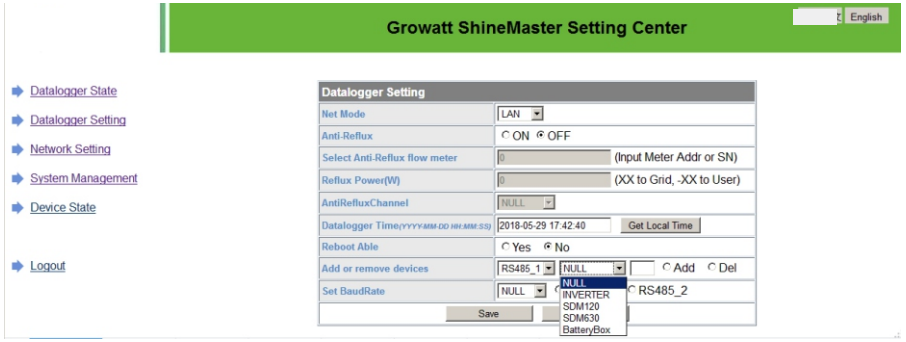

Fig 8.28

3)Fill in the third drop-down list with the photovoltaic device correspondence address.

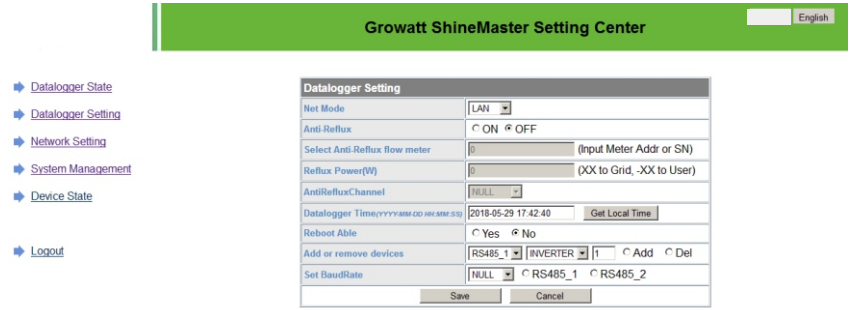

Fig 8.29

4)Select “Add” and then click "Save”.
5)Go to the device status page after saving success to confirm that the device was added successfully.

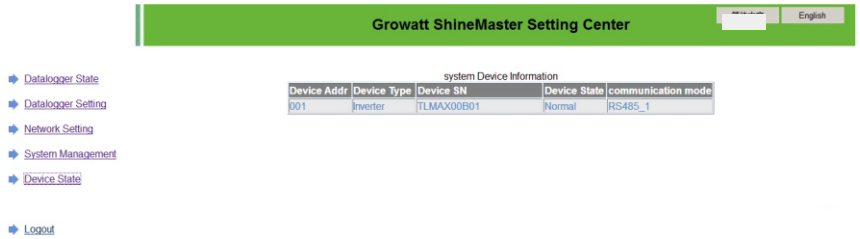

Fig 8.30

B. Delete device
1)Select the first drop-down list of "add or remove devices" to monitor the monitoing mode of photovoltaic devices.
2)Select the type of photovoltaic device monitored in the second drop-down list.
3)Fill in the third drop-down list with the photovoltaic device correspondenc address..
4)Select the following "del" and click Save to complete the device addition.
5)Enter the device status page after successful save to confirm that the device was deleted successfully.

5>ShineMaster Data upload to ShineServer
A. Register:Login
1)Enter the server domain name in the computer browser to enter the shineserver login page, if you are logged in for the first time, please register the user name. Enter the domain name access page, as shown in figure 8.32 below.
Chinese user server domain name:http://server-cn.growatt.com.
The domain name of the international user server is:http://server.growatt.com.

Fig 8.31

2)Register user name, input user information according to prompt, after information is completed, click "register".
Note: "collector serial number" and "collector check code" see shinemaster serialnumber box or guarantee box.

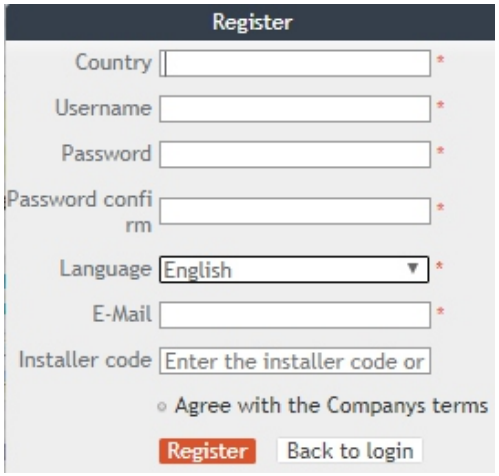

Fig 8.32

B. View monitoring data
1) After registration is complete, jump to the shineserver main interface automatically. Click on "power station" and "work information" to display the information for the power station's total power flow chart on the same day. The drop-down list "Select collector" allows you to view the daily power flow chart of a single inverter for the power station.

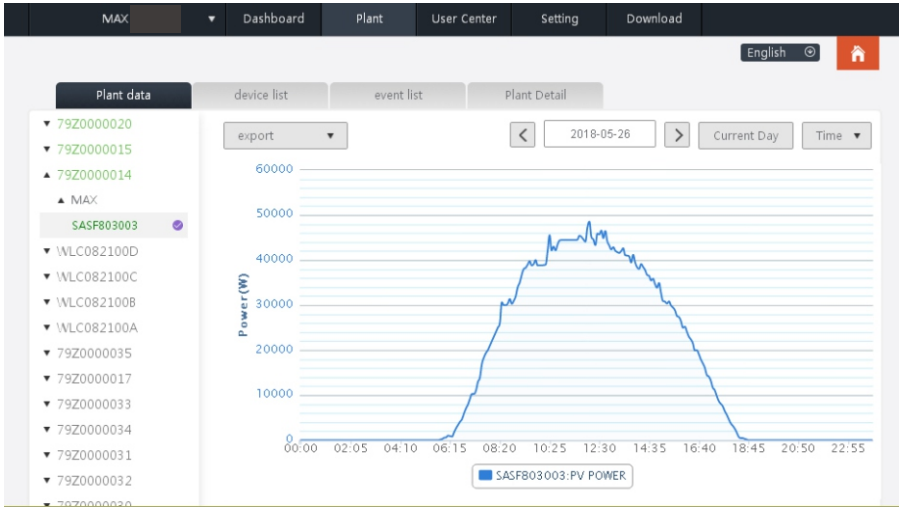

Fig 8.33

2) By clicking on "power station" and "equipment management" in turn, the real-time data of "data collector", "inverter", "environment monitor", "intelligent meter" and "confluence box" MAX "can be viewed.

8.2 Local Data Monitoring

MAX-X2 and MAX-XL2 series Inverter local data monitoring mode has a mobile phone app phone) and PC direct connection, udisk, details are as follows.

8.2.1 Mobile phone app (Shinephone) Local Monitoring

8.2.1.1 Log on to app for local monitoring

Method 1

When you open the app login front page, click the top right corner toolbox icon. Pop up the toolbox, click the local debugging tool, and you can get the wifi name of the collector by scanning the QR code or barcode(The default password for WIFI is 12345678. If you have already connected, you can click "Skip" to connect directly to the WIFI.)

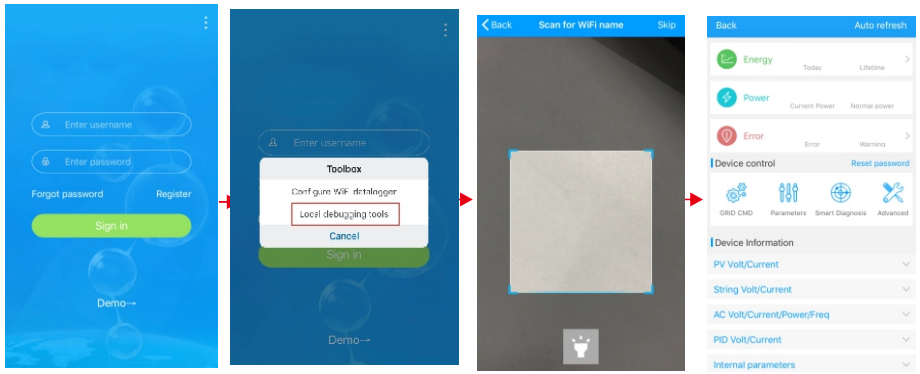

Fig 8.34

Method 2

Open app enter user name and password click login, enter me (personal center). Click the enter tool, find the local debugger to enter, and you can get the wifi name of the collector by scanning the QR code or barcode (The default password for WIFI is 12345678. If you have already connected, you can click "Skip" to connect directly to the WIFI.)

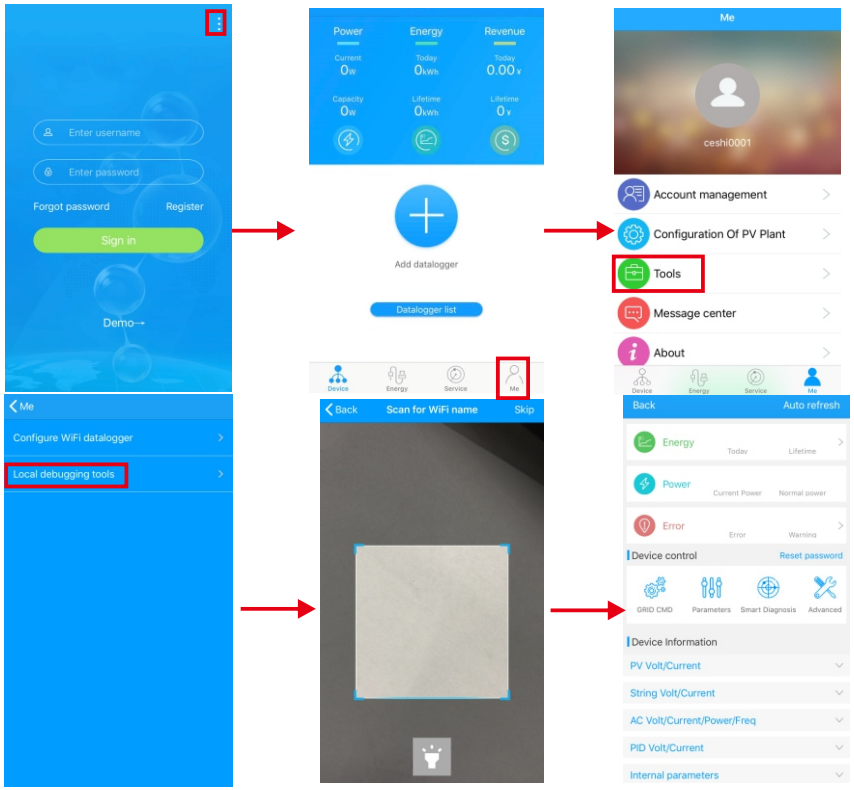

Fig 8.35

8.2.1.2 Use of local monitoring and debugging

When viewing local monitoring, you must keep the phone's wifi connected to the collector's wifi to view local monitoring (to enter the local monitoring page, first click auto refresh to get the latest data information).

Electricity generation: the option to view the latest generation, daily generation, monthly and annual generation of detailed information;

Power: you can see the current power and rated power value; failure: can read the equipment detailed fault information.

1>device control

Note: In addition to resetting the password to connect to the network, other WIFI modules that must connect to the collector can view information.

A.Reset password

Need network connection login oss account to set up or modify the local debug password.

B.Setting configuration

The configuration data of inverter, voltage, power and so on can be modified according to the usage (Fig 8.36).

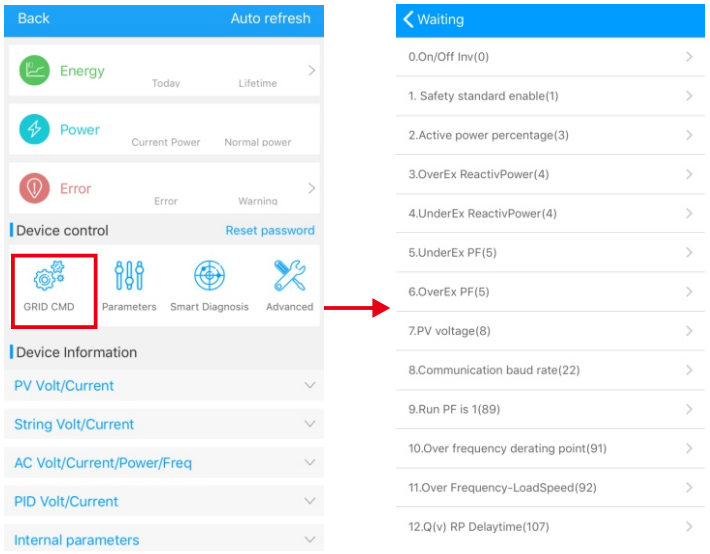

Fig 8.36

C.Parameter configuration
The parameter data of the equipment can be modified according to the usage (Fig 8.37).

D.Intelligent detection
Detailed and accurate view of the device's detailed data and status (Fig 8.38).

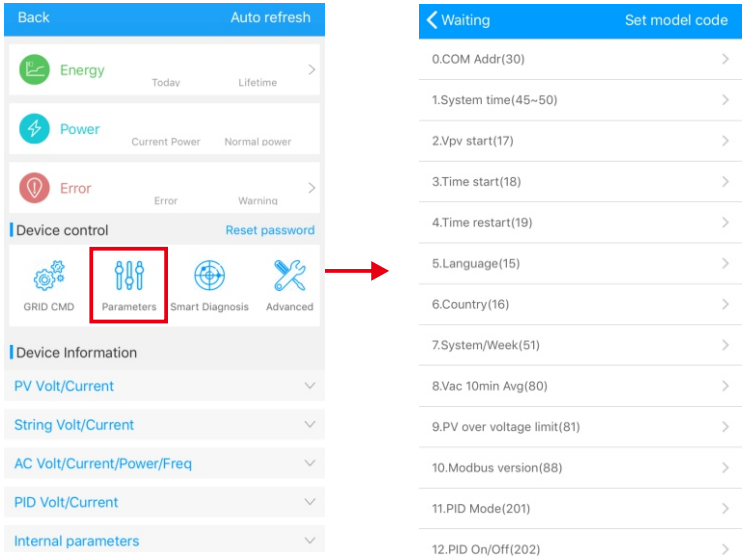

Fig 8.37

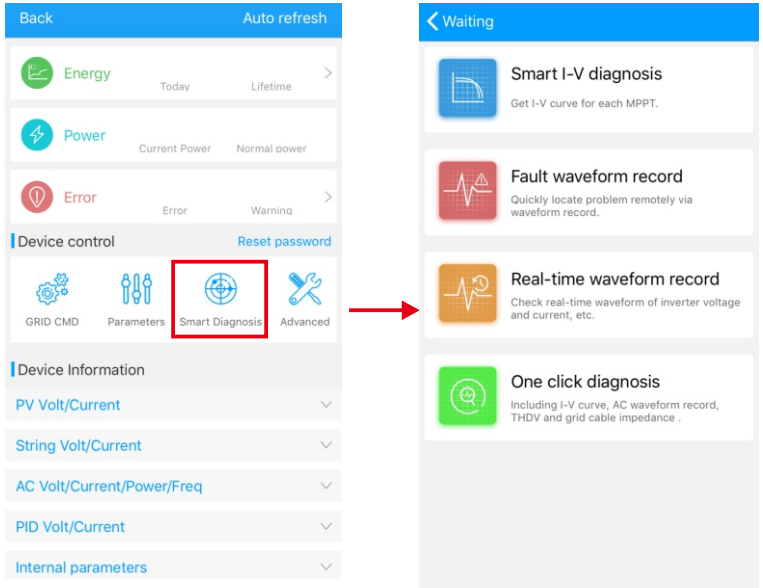

Fig 8.38

E.Intelligent I-V curve scanning
Can remotely scan each mppt (Fig 8.39).

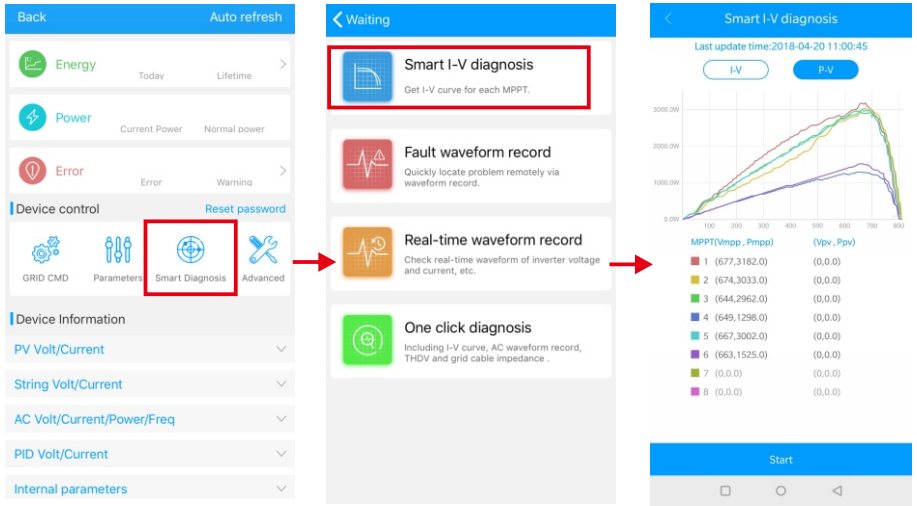

Fig 8.39

F.Fault recording detection
Remote, fast and accurate fault location (Fig 8.40).

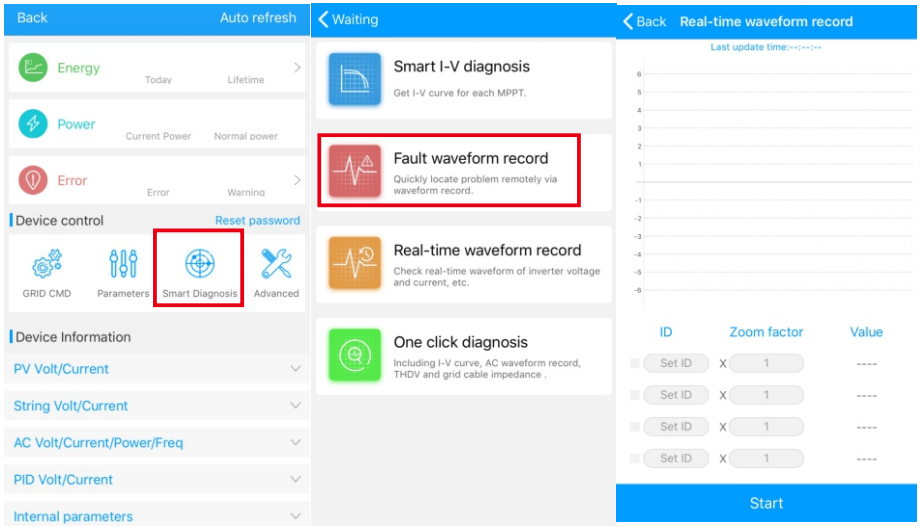

Fig 8.40

G.Real-time recording detection
Inverter voltage and current quality can be observed in real time (Fig 8.41).

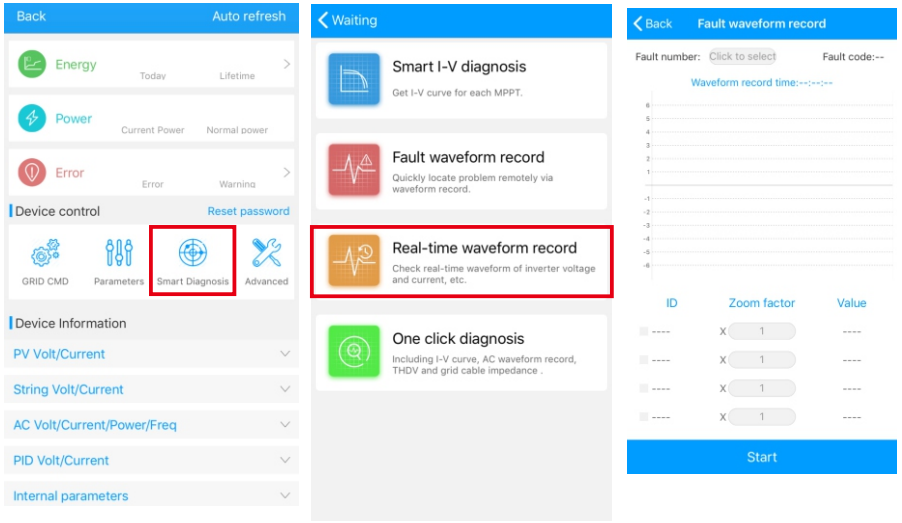

Fig 8.41

H.One click diagnosis
I-V curve diagnosis, grid waveform, THDV and cable impedance detection all at one click(Fig 8.42).

I.High level setting
According to the register address set parameters (professionals).

J.Device information
Check PV voltage/current, string voltage/current, ACvoltage/current/power/frequency, PID voltage/current, internal parameters and device detail information and parameters (Fig 8.43).

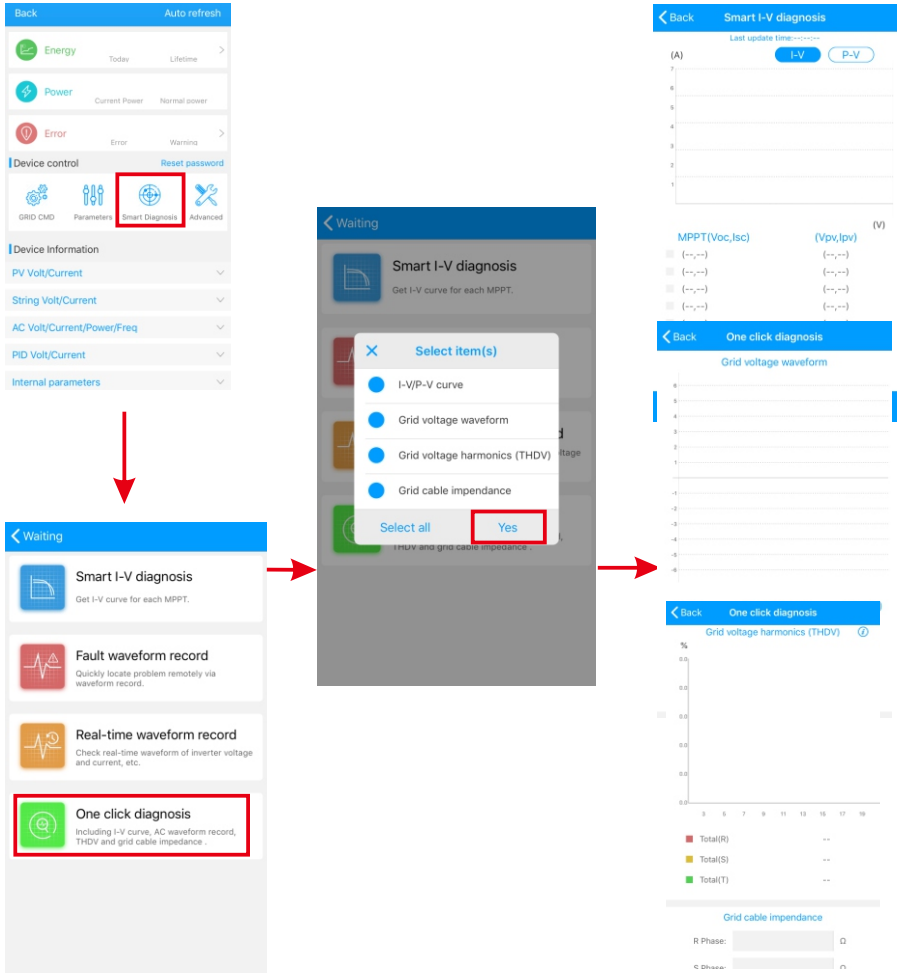

Fig 8.42

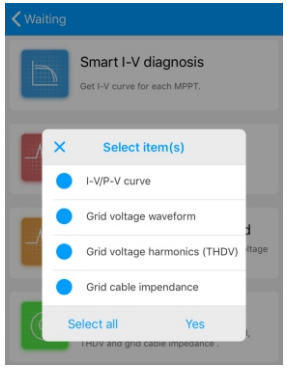

Fig 8.43

8.2.2 U Disk Monitoring

Refer to 6.3.2 USB to WIFI/ U disk communicate connection, the local monitoring of U disk can realize the functions of software burning, fault recording, curve analysis and realtime recording. Details are as follows:

1>Firmware Programming

Create the bconfig.txt file under the root of the U disk, write to the following content, then insert the U disk to programming. Note the M3 program needs to be programming at last time.

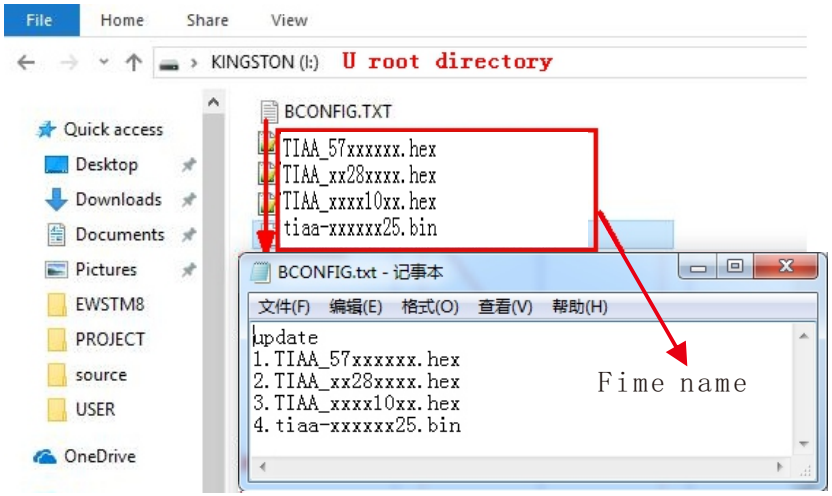

Fig 8.44

2>Fault Recording

Create the bconfig.txt file under the root of the U disk, write the following content, then insert the U disk that can be read fault information, then generates a form under the files in the root directory, A total of 60 fault recording information is stored, the latest Numbers is 0.

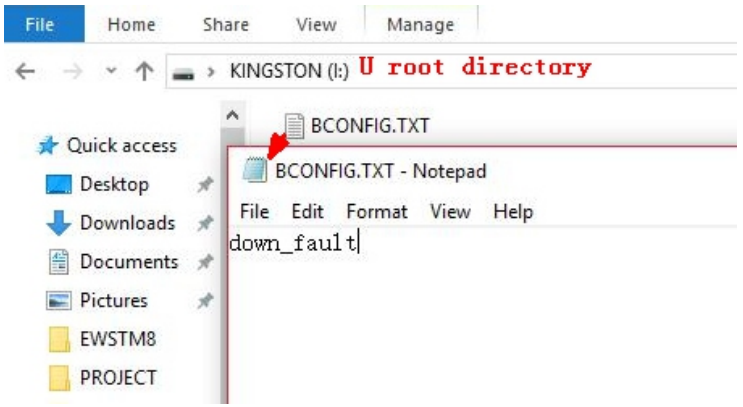

Fig 8.45

3>Curve Analysis

Create the bconfig.txt file under the root of the U disk, write the following content, the insert U disk to record I-V curve, then generates a form under the files in the root directory.

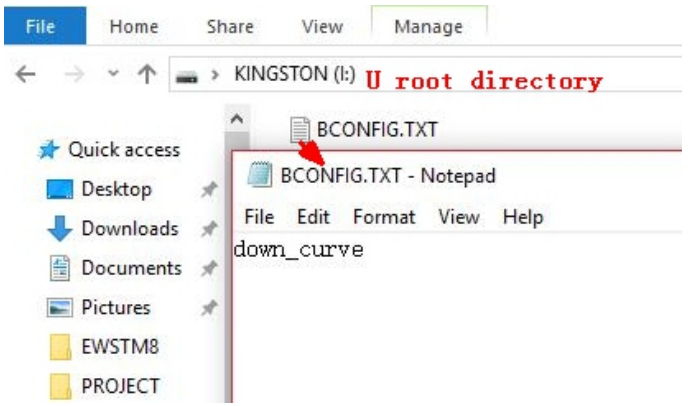

Fig 8.46

4>Real Time Recording
Create the bconfig.txt file under the root of the U disk, write the following content,then insert U disk to read real time recording information,then generates a form under the files in the root directory,the form record's waveform is consistent with the ID of the command setting.

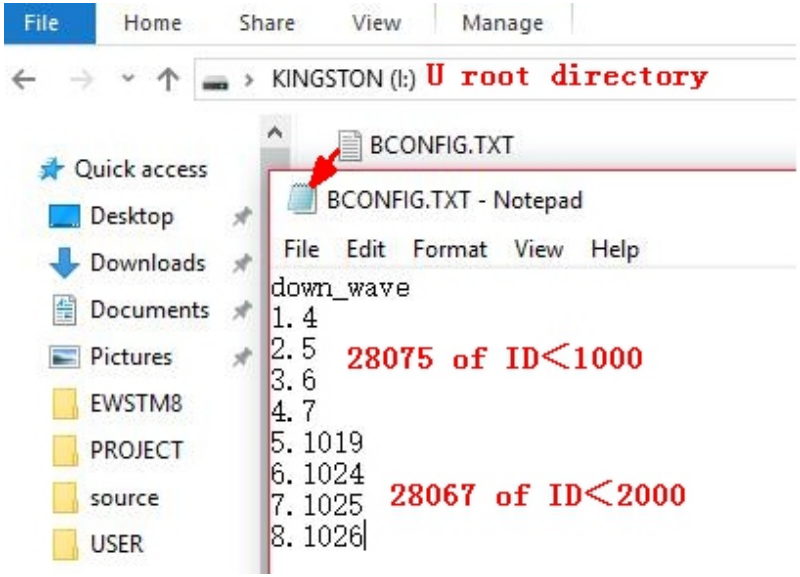

Fig 8.47

9.1 Routine Maintenance

9.1.1 Cleaning Inverter

DANGER	•Before any operation, please disconnect the DC switch and AC switch, and wait for at least 5 minutes until internal capacitance discharge completely.

1>Check the ambient temperature and dust of the inverter, clean the inverter when necessary.

2>Observe whether the air outlets is normal, when necessary, clean the air outlets or clean the fan step by step, steps refer to 9.1.2.

9.1.2 Fan Maintenance

DANGER	•It must be carried out by qualified, trained personnel and comply with all prevailing local code and regulations. •Please disconnect the DC switch and AC switch before any operation, and wait for at least 5 minutes until the internal bus capacitance discharge completely.
WARNING	•Do not use the air pump cleaning fan, which may cause fan damage.

When the Growatt MAX-X2 and MAX-XL2 series inverter work in high temperature environment, good ventilation and heat dissipation can effectively reduce the chance of load derating. Inverter equipped with internal cooling fans, when the internal temperature is too high, the fans work in to reduce the internal temperature. When the inverter is derating because of the internal temperature is too high, the following are the possible reasons or solutions.
1) Fan is blocked or the heat sink gathers too much dust, it needs to clean the fan, fan cover or heat sink.
2) Fan is damaged, it need to replace the fan.
3) Poor ventilation of the installation location, it needs to select the appropriate installation location according to the basic installation requirements.

Fan cleaning and replacement procedure;
1>Please ensure that the DC side and AC side of the inverter have been disconnected before cleaning or replacement of the fan.
1) Turn off DC switch.
2) Disconnect DC terminals from inverter(Users need tools to disconnect the DC connection terminals).
3) Turn off AC switch.

2>Remove the screws on the fan guards with a cross screwdriver. it is shown as below.

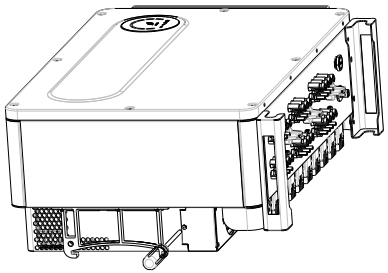

Fig 9.1 External fan view

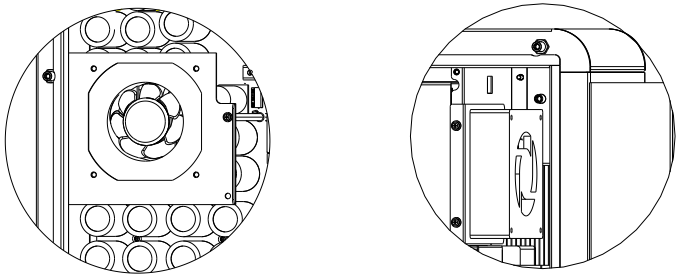

Fig 9.2 Internal fan view

3>Disconnect the wire connector of the fans with a flat head screw driver and remove the fans from the fan guards, it is shown as below.

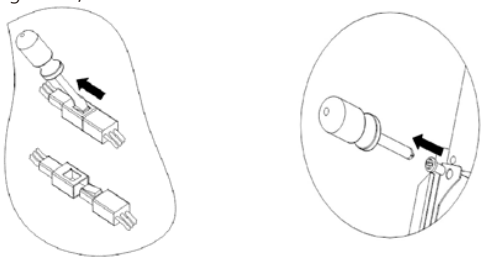

Fig 9.3

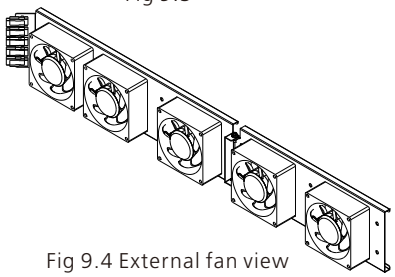

Fig 9.4 External fan view

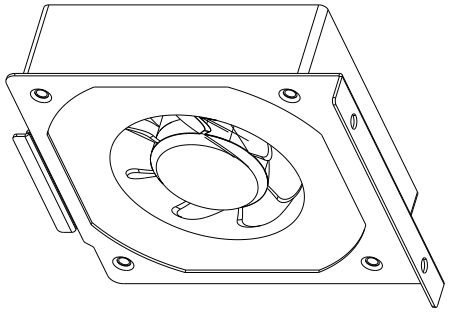

Fig 9.5 Internal fan view

Notice:(MAX-X2 and MAX-XL2 series inverter has seven fans(internal fan*2Pcs)external fan*5Pcs).

4>Clean fan, fan guards and heat sink or replace fan.
1) Clean the fan and fan guards with air pump, brush or a damp cloth.
2) Remove each fan separately for cleaning if necessary.
3) Remove the fan that need to replace with a cross screwdriver, replace a new fan.
4) Tidy up the wire.

5>Install the fan, fan guard fixed and the inverter again.

9.2 Trouble Shooting

DANGER	•It must be operated by well-trained professional electrical technicians and abide by this manual. •Normally grounded conductors may be ungrounded and energized when a PV isolation low is indicated. •Risk of electric shock.

9.2.1 Warning

Warnings identify the current status of the inverter(Max), warnings do not related to a fault and it does not affect the normal running of the inverter. When a warning with a number after it appears in the display, it indicates a warning code and is usually cleared through an orderly shutdown/re-set or a self-corrective action performed by the inverter.

Warning	Description	Suggestion
Warning 200	String Fault	1.After shutdown,check the panel is normal. 2.Contact Growatt.
Warning 201	String abnormal	1.After shutdown,check the panel is normal. 2.Contact Growatt.
Warning 202	DC SPD warning	1. After shutdown,check the DC SPD. 2. Contact Growatt.
Warning 203	PV Circuit short	1. Check if the PV circuit is short-circuited. 2. Contact Growatt.
Warning 204	Dryconnect function abnormal	1. After shutdown,check the dry Dryconnect wiring. 2. Contact Growatt.
Warning 205	PV Boost driver abnormal	1. Restart inverter. 2. Contact Growatt.
Warning 206	AC SPD warning	1. After shutdown,check the AC SPD. 2. Contact Growatt.
Warning 207	USB Over-Current	1. unplug the U disk. 2. Re-access U disk after shutdown. 3. Contact Growatt.
Warning 208	DC Fuse Open	1. After shutdown,check fuse. 2. Contact Growatt.
Warning 209	PV Voltage High	1. Immediately disconnect the DC switch and check the voltage. 2. Contact Growatt.
Warning 210	PV Reversed	1. Check PV input terminals. 2. Contact Growatt.
Warning 217	BDC abnormal	1. Restart inverter. 2. Contact Growatt.
Warning 218	BDC BUS disconnect	1. Restart inverter. 2. Contact Growatt.
Warning 300	No AC Connection	1. Please confirm grid is lost or not. 2. Contact Growatt.
warning 301	AC V Outrange	1. Check the AC voltage is in the range of standard voltage in specification. 2. Contact Growatt.
Warning 302	AC F Outrange	1. Check the frequency is in the range of specification or not. 2. Contact Growatt.
Warning 303	Output overload	1.Reduce the output power. 2.Contact Growatt.
Warning 304	CT open circuit	1.Check CT wiring. 2.Contact Growatt.

Warning	Description	Suggestion
Warning 305	CT is reversed	1.Check if the CT wiring is reversed. 2.Contact Growatt.
Warning 306	CT communication failed	1.Check CT communcation wiring. 2.Contact Growatt.
Warning 307	Wireless CT pairing timed out	1.Check communcation wiring. 2.Contact Growatt.
Warning 308	Meter open circuit	1.Check meter wiring. 2.Contact Growatt.
Warning 309	The meter reversed	1.Check if the meter wiring is reversed. 2.Contact Growatt.
Warning 310	Ground zero detection abnormal	1.After shutdown, Check whether the ground wire is connected well. 2.Contact Growatt.
Warning 400	Fan function abnormal	1. After shutdown,Check the fan connection. 2. Replace the fan. 3. Contact Growatt.
Warning 401	Meter abnormal	1. Check if the communication between the inverter and the meter is abnormal. 2.Check if the meter is on.
Warning 402	The communication between the optimizer and the inverter is abnormal	1.Check if the optimizer is turned on. 2.Check the connection between the optimizer and the inverter.
Warning 403	String abnormal	1.After shutdown,check the panel is normal. 2.Contact Growatt.
Warning 404	EEPROM abnormal	1. Restart inverter. 2. Contact Growatt.
Warning 405	Firmware version abnormal	1. Restart inverter. 2. Contact Growatt.
Warning 406	Boost module error	1. Restart inverter. 2. Contact Growatt.
Warning 407	Over Temperature	1. Restart inverter. 2. Contact Growatt.
Warning 408	NTC broken	1. Restart inverter. 2. Contact Growatt.
Warning 409	Reactive abnormal	1. Check if shinemaster is abnormal. 2. Contact Growatt.

Notice: MAX series inverter has two external fans and five Internal fan.
If the suggestions do not work, please contact to Growatt.

9.2.2 Error

Errors codes identify a possible equipment failure, fault or incorrect inverter setting or configuration, any or all attempts to correct or clear a fault must be performed by qualified personnel.
Typically, the error code can be cleared once the cause or fault is removed.
Some of error code as table shows below, may indicate a fatal error and require you to contact the supplier or Growatt for help.

Error	Description	Suggestion
Error 200	AFCI Fault	1. After shutdown,check the panel terminal. 2. Restart inverter. 3. Contact Growatt.
Error 201	Residual I High	1. Restart inverter. 2. Contact Growatt.
Error 202	PV Voltage High	1. Immediately disconnect the DC switch and check the voltage. 2. Contact Growatt.
Error 203	PV Isolation Low	1. After shutdown, check if the panel shell is reliably grounded. 2. Contact Growatt.
Error 204	PV Reversed	1. After shutdown, check PV input terminals. 2. Contact Growatt.
Error 300	AC V Outrange	1. Check grid voltage. 2. Contact Growatt.
Error 301	AC terminals reversed	1. Check AC terminals. 2. Contact Growatt.
Error 302	No AC Connection	1. After shutdown,check AC wiring. 2. Contact Growatt.
Error 303	NE abnormal	1. After shutdown,ensure that the ground wire is reliably connected. 2. Contact Growatt.
Error 304	AC F Outrange	1. Check the frequency is in the range of specification or not. 2. Contact Growatt.
Error 305	Output overload protected	1.Check output load,Reduce the output power. 2.Contact Growatt.
Error 306	CT is reversed	1.Check if the CT wiring is reversed. 2.Contact Growatt.
Error 307	CT communication failed	1.Check CT communcation wiring. 2.Contact Growatt.
Error 308	Wireless CT pairing timed out	1.Pairing between machine and CT timed out. Re-pair. 2.Contact Growatt.

Error	Description	Suggestion
Error 309	Grid Frequency abnormal	1.Check grid frequency,and Restart. 2.Contact Growatt.
Error 310	Ground zero protected	1.Confirm whether there is an isolation transformer on the output side. 2. For PV- connect ground version,N and PE may be connect.
Error 311	Anti-backflow failure protection	1.If the error is reported and the machine will be restarted soon, it is a normal protective shutdown. 2.Check the CT wiring. 3.Contact Growatt.
Error 400	DC component offset abnormality	1. Restart inverter. 2. Contact Growatt.
Error 401	The DC component of the output voltage is too high	1. Restart inverter. 2. Contact Growatt.
Error 402	The DC component of the output current is too high	1. Restart inverter. 2. Contact Growatt.
Error 403	Output current imbalance	1. Restart inverter. 2. Contact Growatt.
Error 404	DC BUS voltage sampling abnormal	1. Restart inverter. 2. Contact Growatt.
Error 405	Relay abnormal	1. Restart inverter. 2. Contact Growatt.
Error 406	initialization mode abnormal	1. Restart inverter. 2. Contact Growatt.
Error 407	Auto-detection failed	1. Restart inverter. 2. Contact Growatt.
Error 408	NTC Temperature too high	1. Restart inverter. 2. Contact Growatt.
Error 409	Bus voltage abnormal	1. Restart inverter. 2. Contact Growatt.
Error 410	Insulation resistance is inconsistent	1. Restart inverter. 2. Contact Growatt.
Error 411	Communication fault	1. Restart inverter. 2. Contact Growatt.
Error 412	Temperature sensor abnormal	1. Restart inverter. 2. Contact Growatt.
Error 413	IGBT drive fault	1. Restart inverter. 2. Contact Growatt.

Error	Description	Suggestion
Error 414	EEPROM fault	1. Check if shinemaster is abnormal. 2. Contact Growatt.
Error 415	Internal power test fail	1. Restart inverter. 2. Contact Growatt.
Error 416	Over current protected	1. Restart inverter. 2. Contact Growatt.
Error 417	System protocol abnormal	1. Restart inverter. 2. Contact Growatt.
Error 418	firmware version abnormal	1. Restart inverter. 2. Contact Growatt.
Error 419	Leakage current sampling is different	1. Restart inverter. 2. Contact Growatt.
Error 420	GFCI Module damage	1. Restart inverter. 2. Contact Growatt.
Error 421	CPLD abnormal	1. Restart inverter. 2. Contact Growatt.
Error 422	Sampling is inconsistent	1. Restart inverter. 2. Contact Growatt.
Error 425	AFCI self-test fault	1. Restart inverter. 2. Contact Growatt.
Error 426	PV current abnormal	1. Restart inverter. 2. Contact Growatt.
Error 427	AC current abnormal	1. Restart inverter. 2. Contact Growatt.
Error 428	Boost Short Out	1. Contact Growatt.
Error 429	Bus voltage softstart fail	1. Restart inverter. 2. Contact Growatt.

Specification 10

Model / Specifications	MAX 50KTL3-XL2	MAX 60KTL3-XL2	MAX 70KTL3-XL2	MAX 75KTL3-XL2
Input Data(DC)				
Max.recommended PV power(for module STC)	100kW	120kW	105kW	112.5kW
Max. DC voltage	1100V			
Start voltage	195V			
Nominal voltage	370V			
MPP voltage range	180V-850V			
No.of MPP trackers	8			
No.of PV strings per MPP trackers	2			
Max. input current per MPP trackers	40A			
Max.short-circuit current per MPP trackers	50A			
DC overvoltage category	Category II			
Output Data(AC)				
AC nominal power	50kW	60kW	70kW	75kW
Max.AC apparent power	55kVA	66kVA	66kVA@208V 70kVA@220V 73kVA@230V	71kVA@208V 75kVA@220V 78.4kVA@230V
Nominal AC voltage/range	127V/220V 101.6-139.7VAC			
AC grid frequency/range	50/60Hz 45-55Hz/55-65Hz			
Max.output current	144.3A@220V	173.2A@220V	183.7A@220V	196.9A@220V
Power factor(@nominal)	>0.99			
Max. inrush current/duration	20KA/tr:8us,tf:20us			
Max. output facult current/duration	400A/30us			
Adjustable power factor	0.8leading ...0.8lagging			
THDi	<3%			

Model / Specifications	MAX 50KTL3-XL2	MAX 60KTL3-XL2	MAX 70KTL3-XL2	MAX 75KTL3-XL2
AC grid connection type	3W/N/PE			
AC overvoltage category	Category III			
efficiency				
Max.efficiency	98.8%			
Euro-eta	98.3%			
Protection devices				
DC reverse-polarity protection	Yes			
DC switch	Yes			
DC Surge protection	Type II			
Insulation resistance monitoring	Yes			
AC surge protection	Yes			
Grid monitoring	Yes			
Anti-islanding protection	Yes			
Residual-current monitoring unit	Yes			
String monitoring	Yes			
Anti-PID function	Optional			
AFCI protection	Optional			
General data				
Dimensions(W/H/D) in mm	970*640*345mm			
Max.inrush current/duration	20KA/tr:8us,tf:20us			
Weight	84kg			
Operating temperature range	-30℃- +60℃			
Altitude	4000m			
Internal consumption at	<1W(Note1)			

Model / Specifications	MAX 50KTL3-XL2	MAX 60KTL3-XL2	MAX 70KTL3-XL2	MAX 75KTL3-XL2
Topology	Transformerless			
Cooling	Smart air cooling			
Protection degree	IP66			
Relative humidity	0~100%			
DC connection	H4/MC4(Optional)			
AC connection	OT/DT terminal			
Interfaces				
Display	LED/WIFI+APP			
RS485/USB	Yes			
PLC/GPRS/4G	Optional			
Warranty:5 /10 years	Optional			
Certificates and approvals				
Grid regulation	AS/NZS 4777.2,CEI 0-21,CEI 0-16,VDE-AR-N 4105, DIN V VDE V 0126-1-1,UTE C 15-712-1,EN 50438, IEC 60068,IEC 61683,IEC 62116,IEC 61727, MEA,PEA,DRRG/DEWA:2016,BDEW,G59/3			
EMC	EN61000-6-2,EN61000-6-4			
Safety	IEC/EN62109-1,IEC/EN62109-2			
Note1: If with AC power supply function, self-consumption at night is less than 15W.				

Model / Specifications	MAX 124KTL3-X2 MV	MAX 125KTL3-X2 MV	MAX 136KTL3-X2 MV	MAX 150KTL3-X2 MV
Input Data(DC)				
Max.recommended PV power(for module STC)	186kW	187.5kW	204kW	204kW
Max. DC voltage	1100V			
Start voltage	195V			
Nominal voltage	720V			
MPP voltage range	180V-1000V			
No.of MPP trackers	8			
No. of PV strings per MPP trackers	2			
Max.input current per MPP trackers	40A			
Max. short-circuit current per MPP trackers	50A			
DC overvoltage category	Category II			
Output Data(AC)				
AC nominal power	124kW	125kW	136kW	150kW
Max. AC apparent power	136.4kVA	137.5kVA	150kVA	165kVA
Nominal AC voltage/range	277V/480V 408-528VAC			
AC grid frequency/range	50/60Hz 45-55Hz/55-65Hz			
Max.output current	164.1A	165.4A	179.9A	198.5A
Power factor(@nominal)	>0.99			
Max. inrush current/duration	20KA/tr:8us,tf:20us			
Max. output facult current/duration	400A/30us			
Adjustable power factor	0.8leading ...0.8lagging			
THDi	<3%			
AC grid connection type	3W+PE	3W+PE	3W+PE	3W+PE

Model / Specifications	MAX 124KTL3-X2 MV	MAX 125KTL3-X2 MV	MAX 136KTL3-X2 MV	MAX 150KTL3-X2 MV
AC overvoltage category	Category III			
efficiency				
Max.efficiency	99%			
Euro-eta	98.5%			
Protection devices				
DC reverse-polarity protection	Yes			
DC switch	Yes			
DC Surge protection	Type II			
Insulation resistance monitoring	Yes			
AC surge protection	Yes			
Grid monitoring	Yes			
Anti-islanding protection	Yes			
Residual-current monitoring unit	Yes			
String monitoring	Yes			
Anti-PID function	Optional			
AFCI protection	Optional			
General data				
Dimensions(W/H/D) in mm	970*640*345mm			
Max.inrush current/duration	20KA/tr:8us,tf:20us			
Weight	84kg			
Operating temperature range	-30℃- +60℃			
Altitude	4000m			
Internal consumption at	<1W(Note1)			
Topology	Transformerless			

Model / Specifications	MAX 124KTL3-X2 MV	MAX 125KTL3-X2 MV	MAX 136KTL3-X2 MV	MAX 150KTL3-X2 MV
Cooling	Smart air cooling			
Protection degree	IP66			
Relative humidity	0~100%			
DC connection	H4/MC4(Optional)			
AC connection	OT/DT terminal			
Interfaces				
Display	LED/WIFI+APP			
RS485/USB	Yes			
PLC/GPRS/4G	Optional			
Warranty:5/10 years	Optional			
Certificates and approvals				
Grid regulation	AS/NZS 4777.2,CEI 0-21,CEI 0-16,VDE-AR-N 4105, DIN V VDE V 0126-1-1,UTE C 15-712-1,EN 50438, IEC 60068,IEC 61683,IEC 62116,IEC 61727, MEA,PEA,DRRG/DEWA:2016,BDEW,G59/3			
EMC	EN61000-6-2,EN61000-6-4			
Safety	IEC/EN62109-1,IEC/EN62109-2			
Note1: If with AC power supply function, self-consumption at night is less than 15W.				

Decommissioning 11

If the inverter does not operate in the future, it needs to be properly disposed. The steps are as follows:
1>Disconnect the external AC short circuit and prevent reconnection due to misoperation.
2>Turn the DC switch to "OFF" position.
3>Wait at least 5 minutes until the internal capacitor discharge is completed.
4>Disconnect the AC connector.
5>Disconnect DC connector.
6>Remove the inverter from the wall.
7>Disposing of the inverter.

11.1 Disposing Of The MAX-X2 and MAX-XL2 Series Inverter

	Do not dispose of MAX series inverter together with household waste. Please accordance with the disposal regulations for electronic waste which apply at the installation site at that time. Ensure that the old unit and, where applicable, any accessories are disposed of in a proper manner.

Quality assurance 12

Please refer to related file.

13 Contact

If you have technical problems concerning our products, contact your installer or Growatt, please provide information below for better support.

1>Inverter type
2>Serial number of inverter
3>Error code of inverter
4>LED status of inverter
5>DC input voltage of inverter (Modules information)
6>Inverter communication method

Shenzhen Growatt New Energy Co.,Ltd
4-13/F,Building A,Sino-German(Europe) Industrial Park,
Hangcheng Ave,Bao'an District, Shenzhen, China
T： +86 0755 2747 1942
E： service@ginverter.com
W： www.ginverter.com